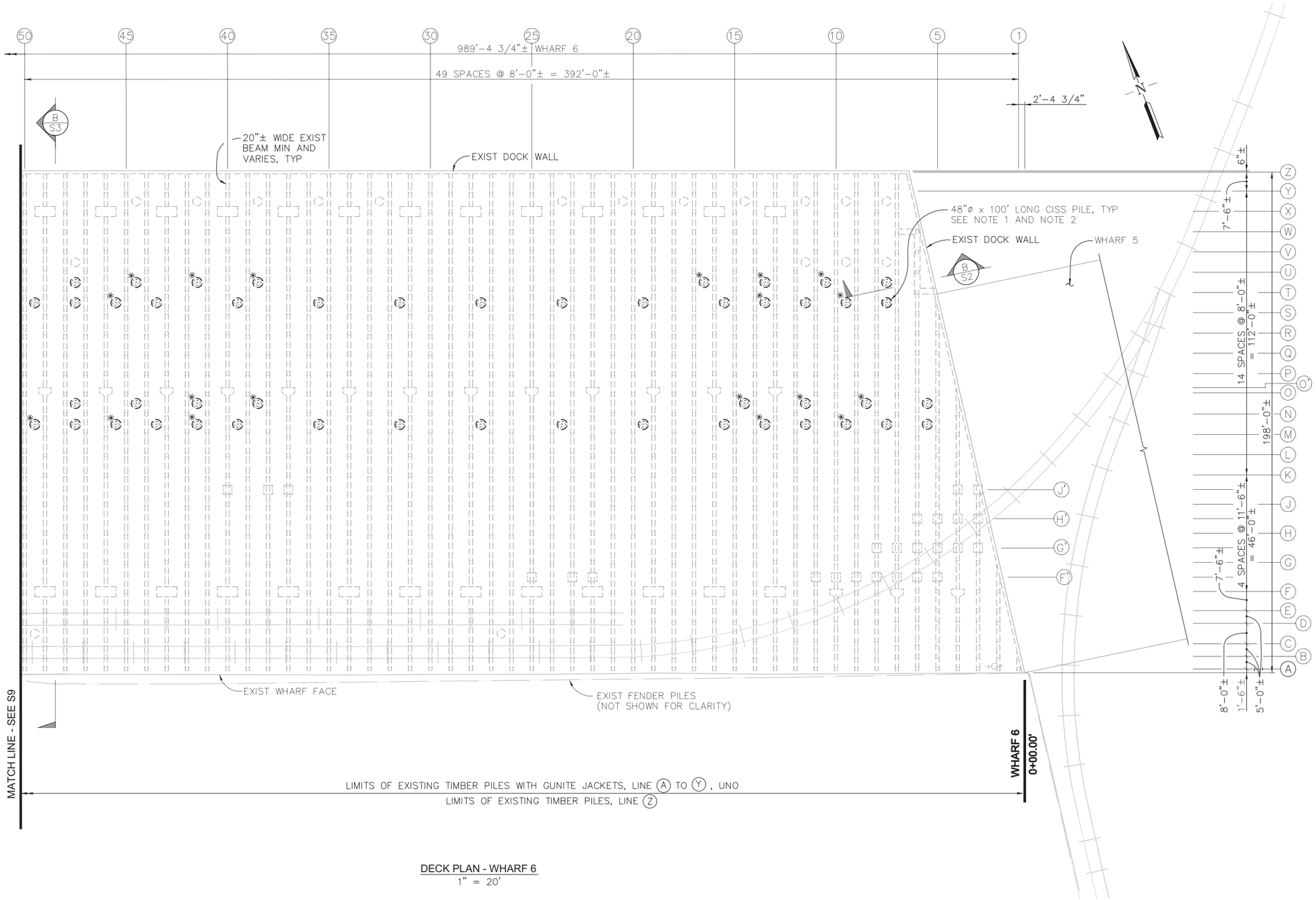

DECK PLAN - WHARF 6
1" = 20'

LEGEND

- INDICATES EXISTING SQUARE CONCRETE PILE CAP WITH PILE TYPE AS INDICATED ON PLAN
- INDICATES EXISTING RECTANGULAR CONCRETE PILE CAP WITH 2 VERTICAL PILES
- INDICATES EXISTING RECTANGULAR CONCRETE PILE CAP WITH 2 VERTICAL PILES AND 2 BATTERED PILES
- INDICATES EXISTING 42" DIAMETER STEEL PIPE PILE
- INDICATES 48" DIAMETER CISS PILE
- INDICATES EXISTING STEEL PILE FRAME
- INDICATES EXISTING CONCRETE PILE CAP WITH 3 VERTICAL PILES
- INDICATES EXISTING CONCRETE PILE CAP WITH 3 VERTICAL PILES AND 2 BATTERED PILES
- ON GRID P' INDICATES RECTANGULAR CONCRETE PILE CAP WITH 3 VERTICAL PILES AND 2 BATTERED PILES (SEE S13)
- INDICATES RECTANGULAR CONCRETE PILE CAP WITH 4 VERTICAL PILES AND 4 BATTERED PILES (SEE S13)
- ON GRID G INDICATES RECTANGULAR CONCRETE PILE CAP WITH 2 VERTICAL PILES (SEE S13)

NOTES

1. CISS PILES SHOWN MEET THE CONTINGENCY LEVEL EARTHQUAKE (CLE)
2. CISS PILE IDENTIFIED BY ✱ DENOTES ADDITIONAL PILE REQUIRED TO MEET THE OPERATING LEVEL EARTHQUAKE (OLE)

PLAN CHECK SET/NOT FOR CONSTRUCTION (4/16/13)

OAKLAND GLOBAL
PORT OF OAKLAND · OAKLAND GLOBAL LLC · CITY OF OAKLAND
"one vision, one team, one project"

BIGGS CARDOSA ASSOCIATES INC
STRUCTURAL ENGINEERS
865 The Alameda
San Jose, California 95126
408-296-5515
BCA

JOB NO.	2011216.5
DRAWN BY:	S. HICKEY
CHECKED BY:	

REGISTERED PROFESSIONAL ENGINEER
TROY M SWENSON
No. 4620
Exp. 12/31/13
STRUCTURAL
STATE OF CALIFORNIA

PROJECT INFO.

OAKLAND ARMY BASE WHARVES
WHARF 6 STRUCTURAL PLAN No. 1 - BENTS 1 TO 50

REV	DATE	COMMENT	CHECKED BY	C.O.O.
	04/15/13	35% SUBMITTAL		

DRAWING NO.
S8
SHEET ___ OF ___
SCALE: AS SHOWN
DATE: 04/15/13

W:\2011\2011216.5\2011216S8.dwg PLOTTED Wednesday April 17, 2013 8:30AM BY JJD
2011216.5 (2011216S8)

NOTES
1. FOR LEGEND SEE SHEET S8.
2. CISS PILES SHOWN MEET THE CONTINGENCY LEVEL EARTHQUAKE (CLE)
3. CISS PILE IDENTIFIED BY ✱ DENOTES ADDITIONAL PILE REQUIRED TO MEET THE OPERATING LEVEL EARTHQUAKE (OLE)

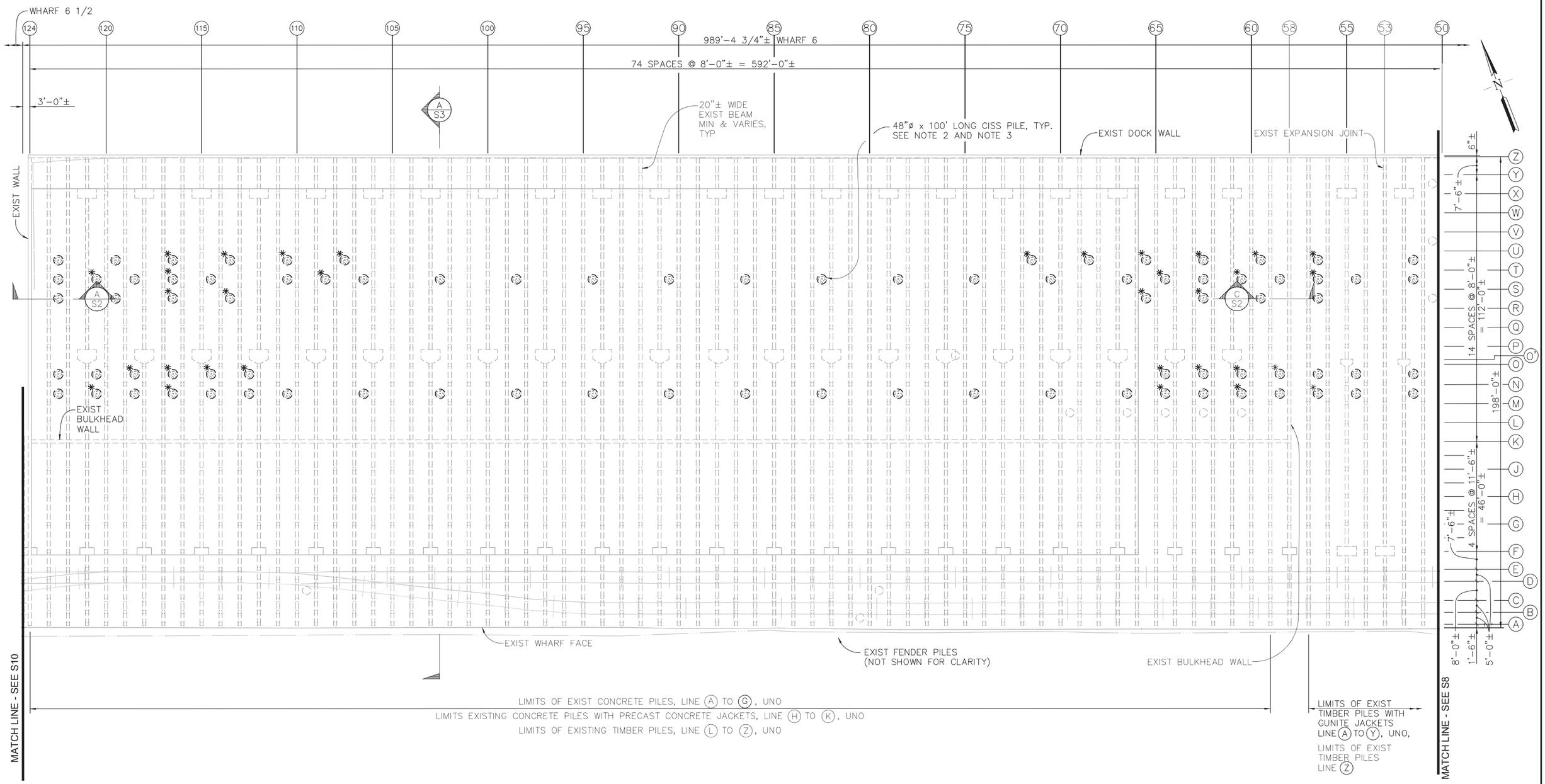

DECK PLAN WHARF 6
1" = 20'

PLAN CHECK SET/NOT FOR CONSTRUCTION (4/16/13)

OAKLAND GLOBAL
PORT OF OAKLAND · OAKLAND GLOBAL LLC · CITY OF OAKLAND
"one vision, one team, one project"

BIGGS CARDOSA ASSOCIATES INC
STRUCTURAL ENGINEERS
865 The Alameda
San Jose, California 95126
408-296-5515
BCA

JOB NO.	2011216.5
DRAWN BY:	S. HICKEY
CHECKED BY:	

REGISTERED PROFESSIONAL ENGINEER TROY M. SWENSON No. 4620 Exp. 12/31/13 STRUCTURAL STATE OF CALIFORNIA

PROJECT INFO.

OAKLAND ARMY BASE WHARVES
WHARF 6 STRUCTURAL PLAN No. 2 - BENTS 51 TO 124

REV	DATE	COMMENT	CHECKED BY	C.O.O.
	04/15/13	35% SUBMITTAL		

DRAWING NO. S9
SHEET ___ OF ___
SCALE: AS SHOWN
DATE: 04/15/13

W:\2011\2011216.5\2011216S9.dwg PLOTTED Wednesday April 17, 2013 8:30AM BY JJD

(2011216S9) 2011216.5

NOTES

1. FOR LEGEND SEE SHEET S8.
2. CISS PILES SHOWN MEET THE CONTINGENCY LEVEL EARTHQUAKE (CLE)
3. CISS PILE IDENTIFIED BY ✳ DENOTES ADDITIONAL PILE REQUIRED TO MEET THE OPERATING LEVEL EARTHQUAKE (OLE)

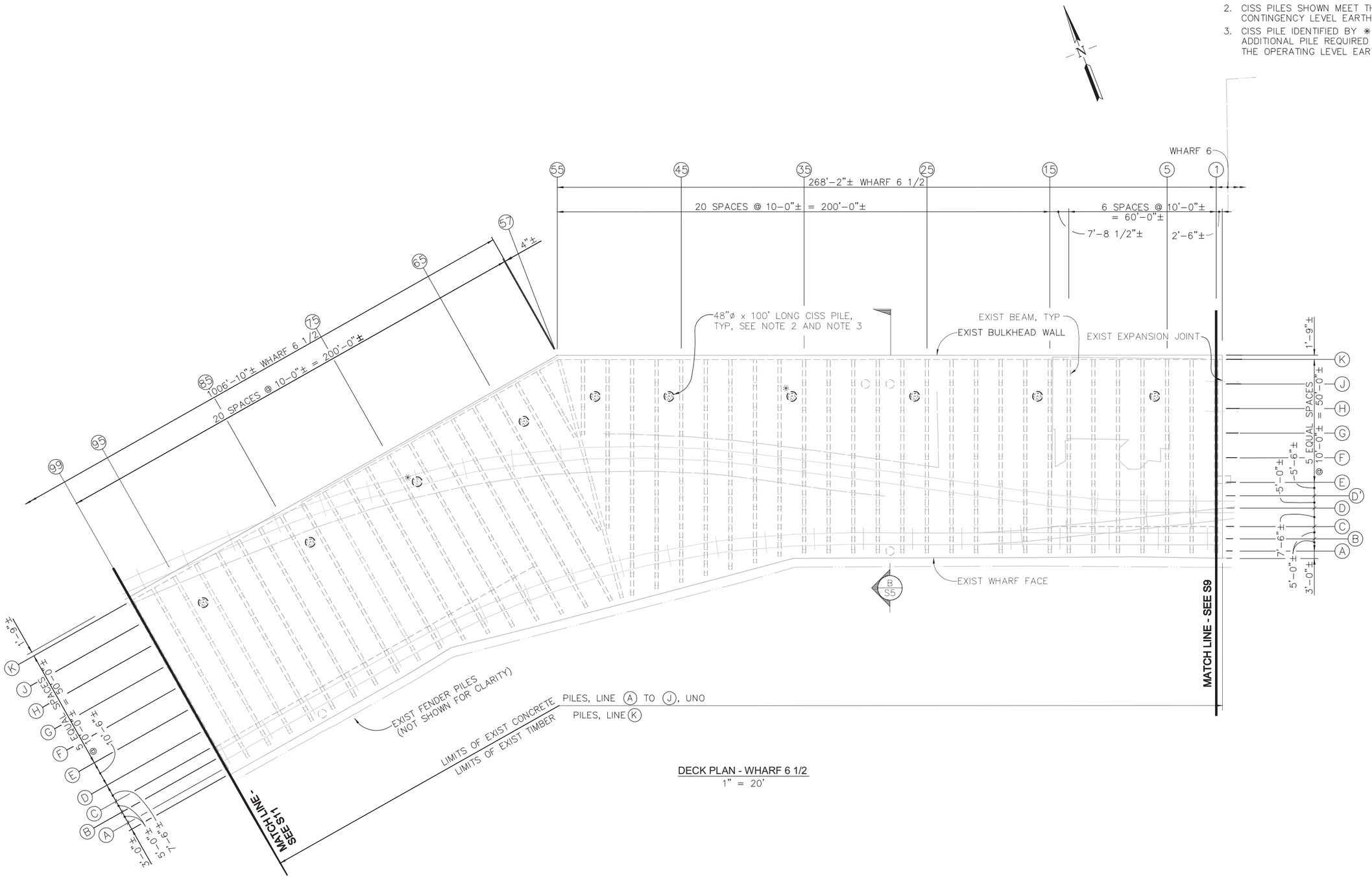

DECK PLAN - WHARF 6 1/2
1" = 20'

PLAN CHECK SET/NOT FOR CONSTRUCTION (4/12/13)

OAKLAND GLOBAL

PORT OF OAKLAND · CLIPPER COVE, LLC · CITY OF OAKLAND

"one vision, one team, one project"

BIGGS CARDOSA ASSOCIATES INC
STRUCTURAL ENGINEERS

865 The Alameda
San Jose, California 95126
408-296-5515

BCA

JOB NO.	2011216.5
DRAWN BY:	S. HICKEY
CHECKED BY:	

REGISTERED PROFESSIONAL ENGINEER
TROY M SWENSON
No. 4620
Exp. 12/31/13
STRUCTURAL
STATE OF CALIFORNIA

PROJECT INFO.

OAKLAND ARMY BASE WHARVES
WHARF 6 1/2 STRUCTURAL PLAN No. 1 - BENTS 1 TO 99

REV	DATE	COMMENT	CHECKED BY	C.O.O.
	04/15/13	35% SUBMITTAL		

DRAWING NO.
S10
SHEET ___ OF ___

SCALE:	AS SHOWN
DATE:	04/15/13

(2011216SS10)
2011216.5

W:\2011\2011216.5\2011216SS10.dwg PLOTTED Wednesday April 17, 2013 8:31AM BY JJD

NOTES

1. FOR LEGEND SEE SHEET S8.
2. CISS PILES SHOWN MEET THE CONTINGENCY LEVEL EARTHQUAKE (CLE)
3. CISS PILE IDENTIFIED BY ✳ DENOTES ADDITIONAL PILE REQUIRED TO MEET THE OPERATING LEVEL EARTHQUAKE (OLE)

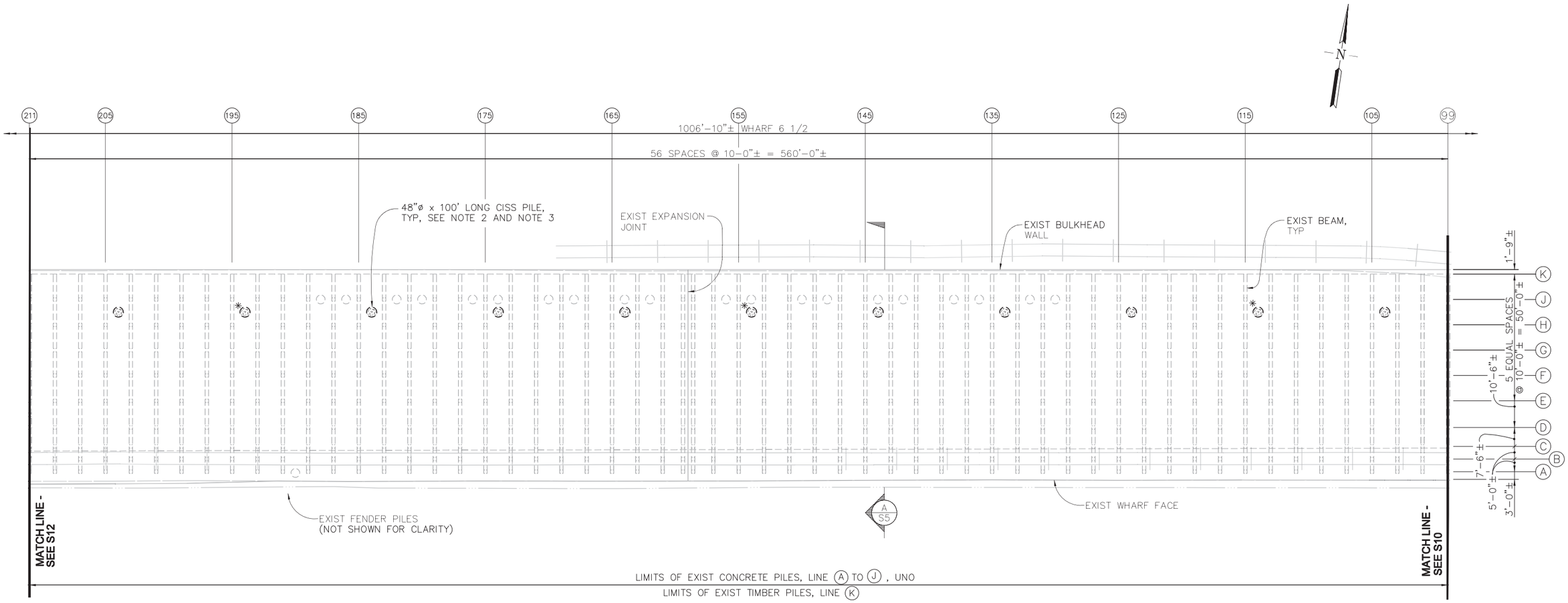

DECK PLAN WHARF 6 1/2
1" = 20'

PLAN CHECK SET/NOT FOR CONSTRUCTION (4/16/13)

OAKLAND GLOBAL
PORT OF OAKLAND · OAKLAND GLOBAL LLC · CITY OF OAKLAND
"one vision, one team, one project"

BIGGS CARDOSA ASSOCIATES INC
STRUCTURAL ENGINEERS
865 The Alameda
San Jose, California 95126
408-296-5515

JOB NO.	2011216.5
DRAWN BY:	S. HICKEY
CHECKED BY:	

REGISTERED PROFESSIONAL ENGINEER TROY M SWENSON No. 4620 Exp. 12/31/13 STRUCTURAL STATE OF CALIFORNIA

PROJECT INFO.

OAKLAND ARMY BASE WHARVES
WHARF 6 1/2 STRUCTURAL PLAN No. 2 - BENTS 101 TO 211

REV	DATE	COMMENT	CHECKED BY	C.O.O.
	04/15/13	35% SUBMITTAL		

DRAWING NO. S11
SHEET __ OF __
SCALE: AS SHOWN
DATE: 04/15/13

W:\2011\2011216.5\20112165S11.dwg PLOTTED Wednesday April 17, 2013 8:31AM BY JJD

(20112165S11) 2011216.5

NOTES

1. FOR LEGEND SEE SHEET S8.
2. CISS PILES SHOWN MEET THE CONTINGENCY LEVEL EARTHQUAKE (CLE)
3. CISS PILE IDENTIFIED BY ✳ DENOTES ADDITIONAL PILE REQUIRED TO MEET THE OPERATING LEVEL EARTHQUAKE (OLE)

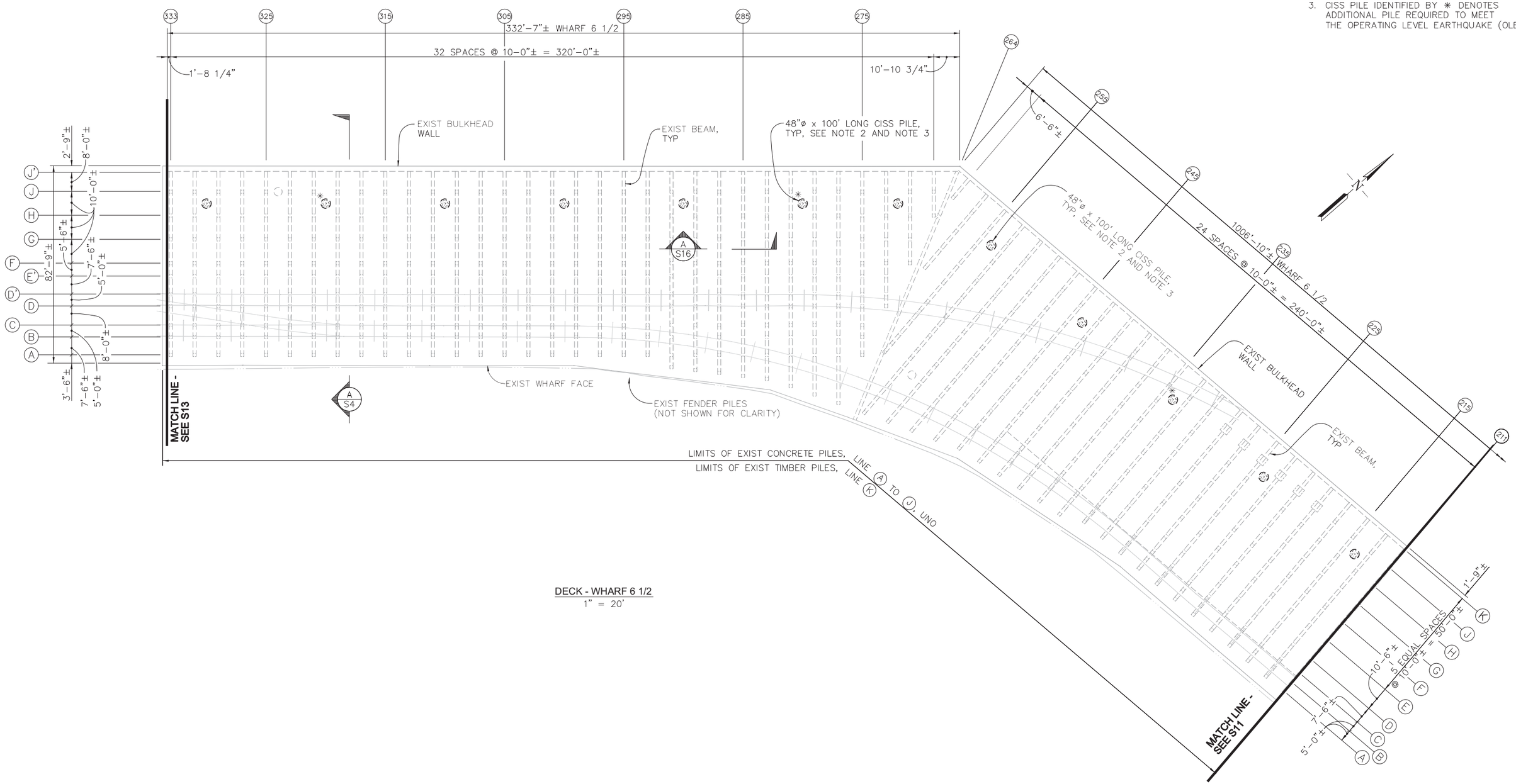

DECK - WHARF 6 1/2
1" = 20'

PLAN CHECK SET/NOT FOR CONSTRUCTION (4/16/13)

OAKLAND GLOBAL

PORT OF OAKLAND · CITY OF OAKLAND

"one vision, one team, one project"

BIGGS CARDOSA ASSOCIATES INC
STRUCTURAL ENGINEERS
865 The Alameda
San Jose, California 95126
408-296-5515
BCA

JOB NO.	2011216.5
DRAWN BY:	S. HICKEY
CHECKED BY:	

REGISTERED PROFESSIONAL ENGINEER TROY M SWENSON No. 4620 Exp. 12/31/13 STRUCTURAL STATE OF CALIFORNIA

PROJECT INFO.

OAKLAND ARMY BASE WHARVES
WHARF 6 1/2 STRUCTURAL PLAN No. 3 - BENTS 213 TO 333

REV	DATE	COMMENT	CHECKED BY	C.O.O.
	04/15/13	35% SUBMITTAL		

DRAWING NO. S12
SHEET ___ OF ___
SCALE: AS SHOWN
DATE: 04/15/13

W:\2011\2011216.5\2011216SS12.dwg PLOTTED Wednesday April 17, 2013 8:31AM BY JJD

2011216.5 (2011216SS12)

NOTES
1. FOR LEGEND SEE SHEET S8.
2. CISS PILES SHOWN MEET THE CONTINGENCY LEVEL EARTHQUAKE (CLE)

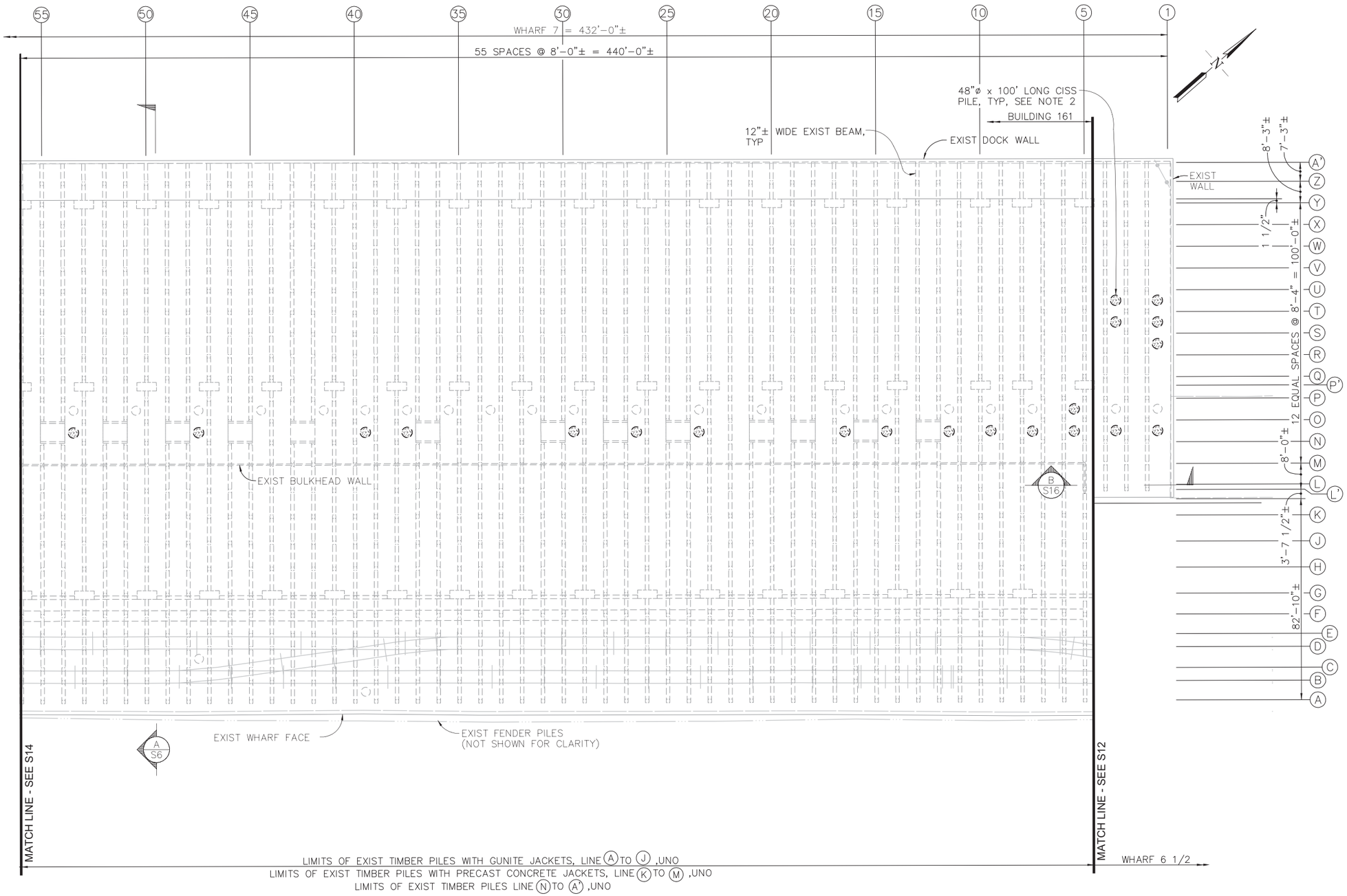

DECK PLAN WHARF 7
1" = 20'

PLAN CHECK SET/NOT FOR CONSTRUCTION (4/12/13)

OAKLAND GLOBAL
PORT OF OAKLAND · OAKLAND GLOBAL LLC · CITY OF OAKLAND
"one vision, one team, one project"

BIGGS CARDOSA ASSOCIATES INC
STRUCTURAL ENGINEERS
865 The Alameda
San Jose, California 95126
408-296-5515

JOB NO.	2011216.5
DRAWN BY:	S. HICKEY
CHECKED BY:	

REGISTERED PROFESSIONAL ENGINEER TROY M. SWENSON No. 4620 Exp. 12/31/13 STRUCTURAL STATE OF CALIFORNIA

PROJECT INFO.

OAKLAND ARMY BASE WHARVES
WHARF 7 STRUCTURAL PLAN No. 1 - BENTS 1 TO 56

REV	DATE	COMMENT	CHECKED BY	C.O.O.
	04/15/13	35% SUBMITTAL		

DRAWING NO. S13
SHEET ___ OF ___
SCALE: AS SHOWN
DATE: 04/15/13

W:\2011\2011216.5\2011216S13.dwg PLOTTED Wednesday April 17, 2013 8:32AM BY JJD

2011216.5 (2011216S13)

NOTES

1. FOR LEGEND SEE SHEET S8.
2. CISS PILES SHOWN MEET THE CONTINGENCY LEVEL EARTHQUAKE (CLE)
3. CISS PILE IDENTIFIED BY ✳ DENOTES ADDITIONAL PILE REQUIRED TO MEET THE OPERATING LEVEL EARTHQUAKE (OLE)

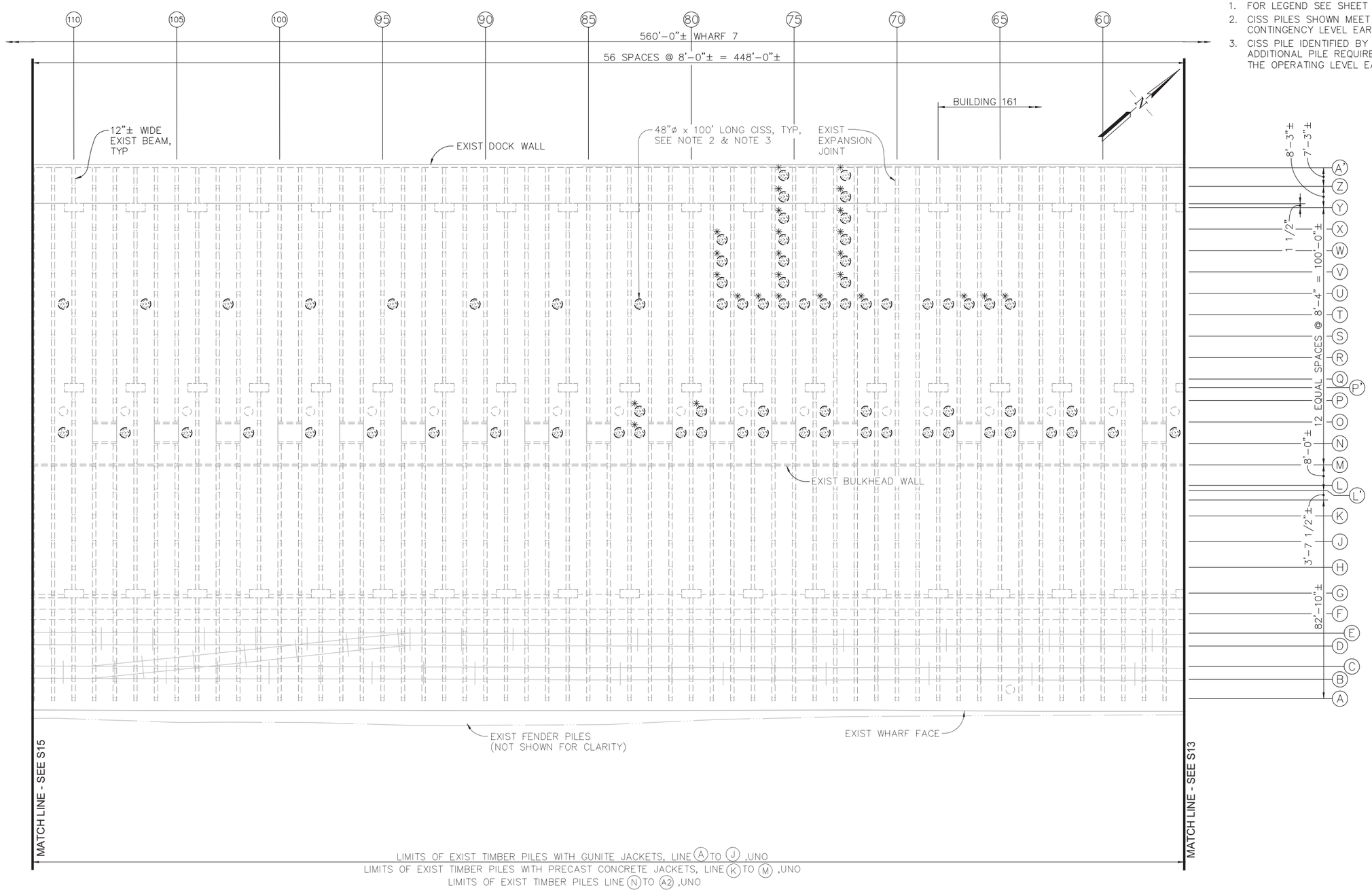

DECK PLAN WHARF 7
1" = 20'

PLAN CHECK SET/NOT FOR CONSTRUCTION (4/12/13)

OAKLAND GLOBAL

PORT OF OAKLAND · CCIG OAKLAND LLC · CITY OF OAKLAND

"one vision, one team, one project"

BIGGS CARDOSA ASSOCIATES INC
STRUCTURAL ENGINEERS
865 The Alameda
San Jose, California 95126
408-296-5515

BCA

JOB NO.	2011216.5
DRAWN BY:	S. HICKEY
CHECKED BY:	

REGISTERED PROFESSIONAL ENGINEER TROY M SWENSON No. 4620 Exp. 12/31/13 STRUCTURAL STATE OF CALIFORNIA

PROJECT INFO.

OAKLAND ARMY BASE WHARVES
WHARF 7 STRUCTURAL PLAN No. 2 - BENTS 57 TO 112

REV	DATE	COMMENT	CHECKED BY	C.O.O.
	04/15/13	35% SUBMITTAL		

DRAWING NO.
S14
SHEET ___ OF ___
SCALE: AS SHOWN
DATE: 04/15/13

W:\2011\2011216.5\2011216SS14.dwg PLOTTED Wednesday April 17, 2013 8:32AM BY JJD

(2011216SS14)
2011216.5

NOTES
1. FOR LEGEND SEE SHEET S8.
2. CISS PILES SHOWN MEET THE CONTINGENCY LEVEL EARTHQUAKE (CLE)
3. CISS PILE IDENTIFIED BY ✳ DENOTES ADDITIONAL PILE REQUIRED TO MEET THE OPERATING LEVEL EARTHQUAKE (OLE)

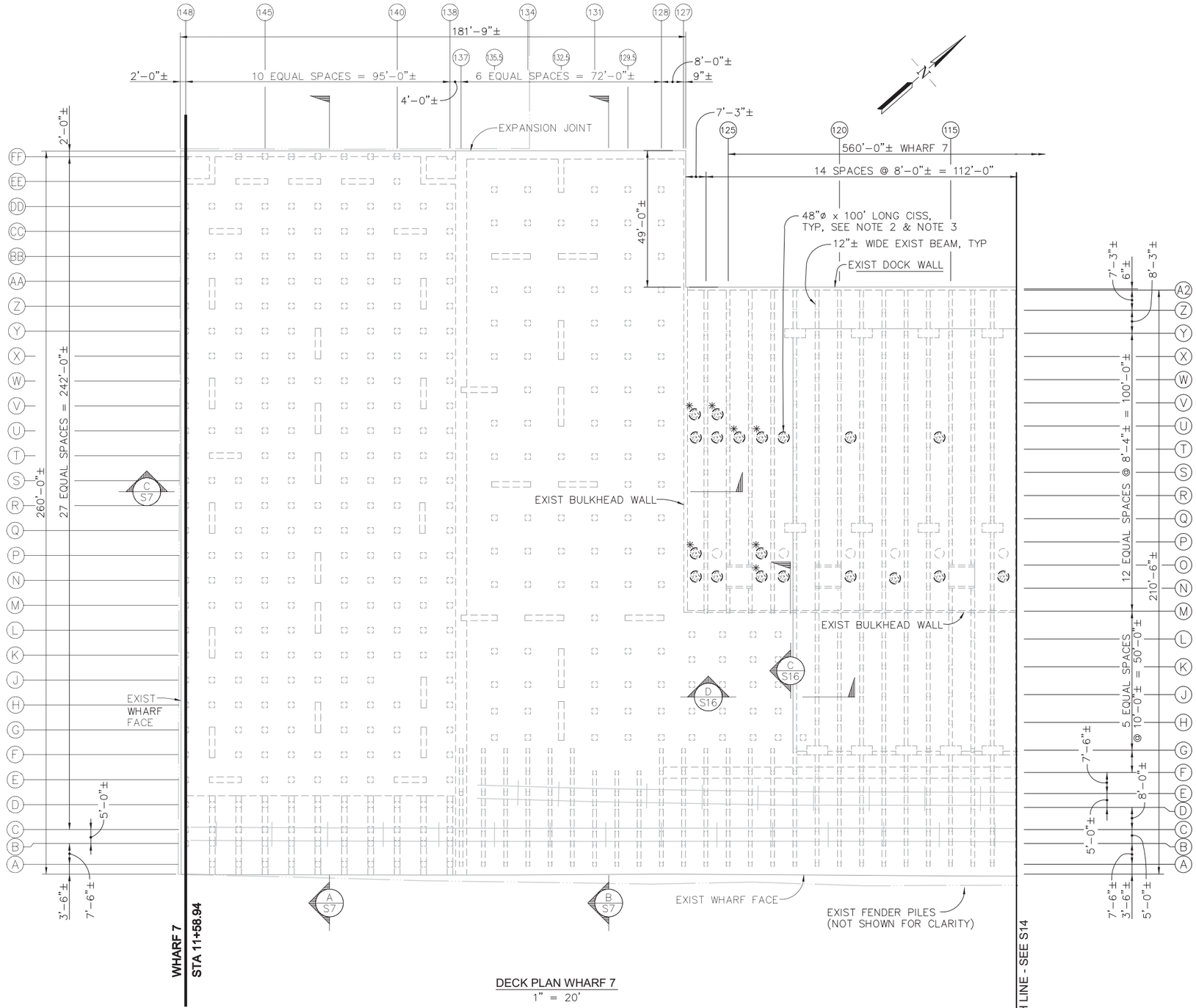

DECK PLAN WHARF 7
1" = 20'

PLAN CHECK SET/NOT FOR CONSTRUCTION (4/12/13)

OAKLAND GLOBAL
PORT OF OAKLAND · OAKLAND GLOBAL LLC · CITY OF OAKLAND
"one vision, one team, one project"

BIGGS CARDOSA ASSOCIATES INC
STRUCTURAL ENGINEERS
865 The Alameda
San Jose, California 95126
408-296-5515

JOB NO.	2011216.5
DRAWN BY:	S. HICKEY
CHECKED BY:	

REGISTERED PROFESSIONAL ENGINEER TROY M SWENSON No. 4620 Exp. 12/31/13 STRUCTURAL STATE OF CALIFORNIA

PROJECT INFO.

OAKLAND ARMY BASE WHARVES
WHARF 7 STRUCTURAL PLAN No. 3 - BENTS 113 TO 148

REV	DATE	COMMENT	CHECKED BY	C.O.O.
	04/15/13	35% SUBMITTAL		

DRAWING NO. S15
SHEET ___ OF ___
SCALE: AS SHOWN
DATE: 04/15/13

W:\2011\2011216.5\2011216S15.dwg PLOTTED Wednesday April 17, 2013 8:33AM BY JJD

(2011216S15)
2011216.5

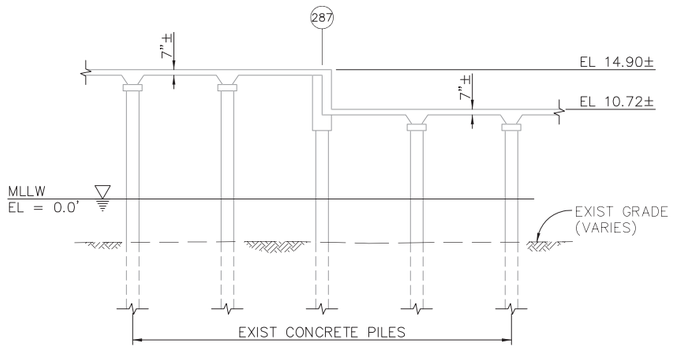

WHARF 6 1/2 AT BENT 287/ROW H

A SECTION
NTS

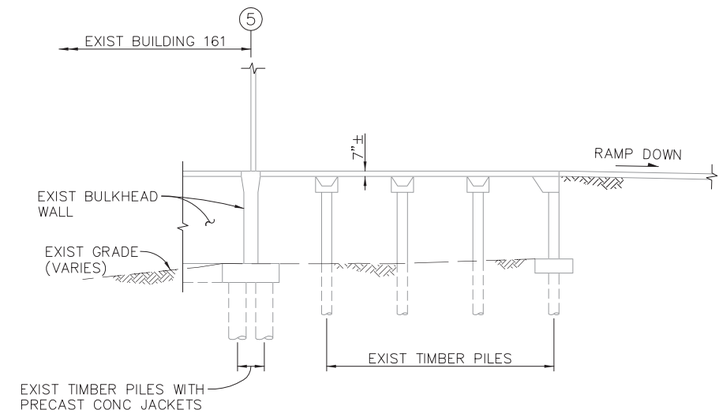

WHARF 7 AT BENT 5/ROW M

B SECTION
NTS

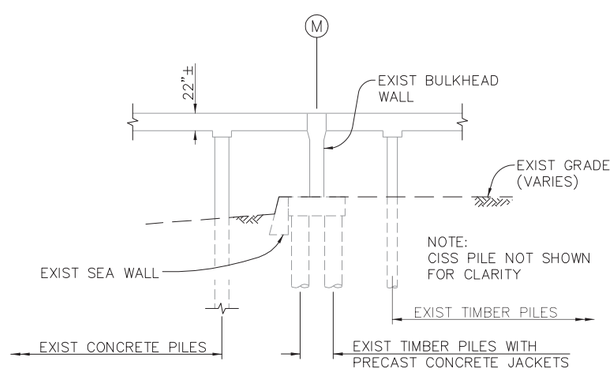

WHARF 7 AT BENT 123/ROW M

C SECTION
NTS

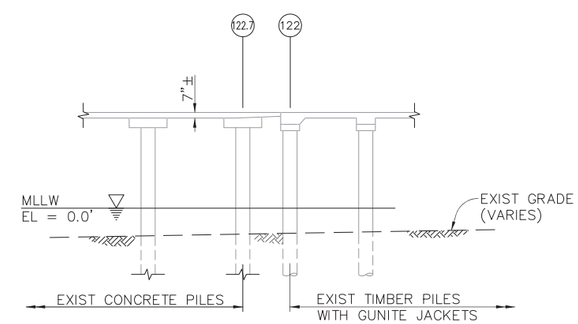

WHARF 7 AT BENT 122/ROW Jc

D SECTION
NTS

PLAN CHECK SET/NOT FOR CONSTRUCTION (4/12/13)

OAKLAND GLOBAL

PORT OF OAKLAND · OAKLAND GLOBAL LLC · CITY OF OAKLAND

"one vision, one team, one project"

BIGGS CARDOSA ASSOCIATES INC
STRUCTURAL ENGINEERS

865 The Alameda
San Jose, California 95126
408-296-5515

BCA

JOB NO.	2011216.5
DRAWN BY:	S. HICKEY
CHECKED BY:	

REGISTERED PROFESSIONAL ENGINEER
TROY M SWENSON
No. 4620
Exp. 12/31/13
STRUCTURAL
STATE OF CALIFORNIA

PROJECT INFO.

OAKLAND ARMY BASE WHARVES
EXISTING STRUCTURAL SECTIONS AND DETAILS

REV	DATE	COMMENT	CHECKED BY	C.O.O.
	04/15/13	35% SUBMITTAL		

DRAWING NO.
S16
SHEET ___ OF ___

SCALE:	AS SHOWN
DATE:	04/15/13

2011216.5 (2011216S16)

W:\2011\2011216.5\2011216S16.dwg PLOTTED Wednesday April 17, 2013 8:33AM BY JJD

PILE REPAIR SCHEDULE				
WHARF	TYPE	ESTIMATED QUANTITY (# PILES)		DETAIL
		LAND SIDE	WATER SIDE	
6	TIMBER PILE PROTECTION	50	NA	10/S18
6	TIMBER PILE STRENGTHENING	30	80	11/S18
6	TIMBER PILE STUBBING	10	40*	12/S18
6	CONCRETE PILE PROTECTION	NA	70*	4/S17
6	CONCRETE PILE STRENGTHENING	NA	30*	5/S17
6	PILE REPLACEMENT/NEW PILE	NA	40*	6/S17 & 7/S17
6	JACKET REPAIR	NA	210*	8/S17
6½	CONCRETE PILE PROTECTION	NA	280*	4/S17
6½	CONCRETE PILE STRENGTHENING	NA	160	5/S17
6½	PILE REPLACEMENT/NEW PILE	NA	5*	6/S17 & 7/S17
7	TIMBER PILE PROTECTION	90	NA	10/S18
7	TIMBER PILE STRENGTHENING	60	70*	11/S18
7	TIMBER PILE STUBBING	20	50*	12/S18
7	CONCRETE PILE PROTECTION	NA	180*	4/S17
7	CONCRETE PILE STRENGTHENING	NA	40*	5/S17
7	PILE REPLACEMENT/NEW PILE	NA	20	6/S17 & 7/S17
7	JACKET REPAIR	NA	280*	8/S17

* QUANTITIES REVISED FROM 02/01/13 SUBMITTAL

SLAB AND BEAM REPAIR SCHEDULE			
WHARF	TYPE	ESTIMATED QUANTITY (SQUARE FEET)	DETAIL
6	BEAM	500	1/S16
6	SLAB	1900	2/S16
6	PILE CAP	300	1/S16
6½	BEAM	290	1/S16
6½	SLAB	1300	2/S16
6½	PILE CAP	130	1/S16
7	BEAM	550	1/S16
7	SLAB	2500	2/S16
7	PILE CAP	330	1/S16

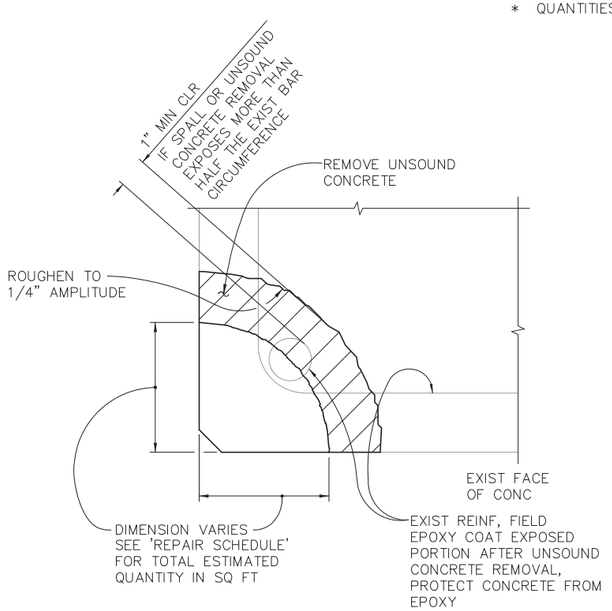

1 DETAIL
NTS

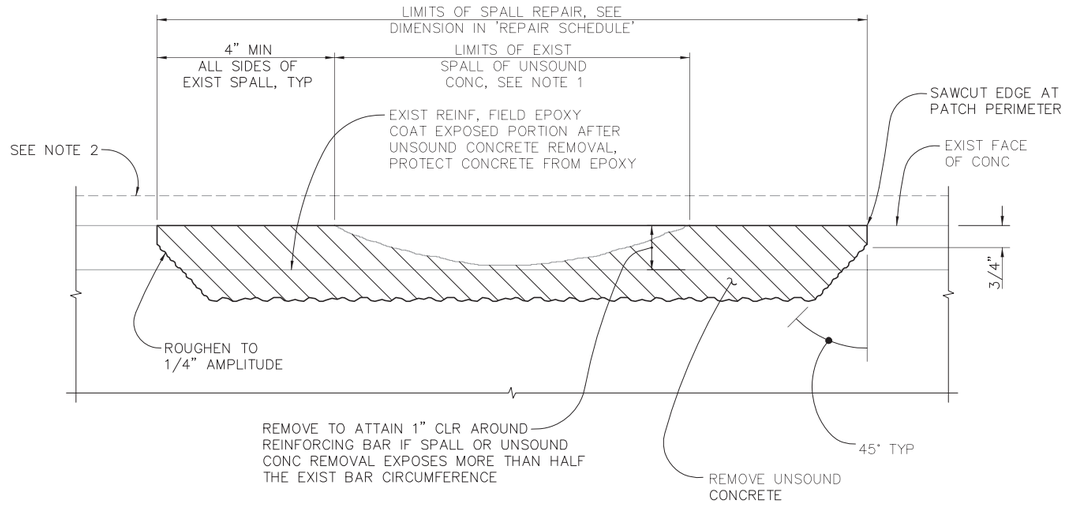

2 DETAIL
NTS

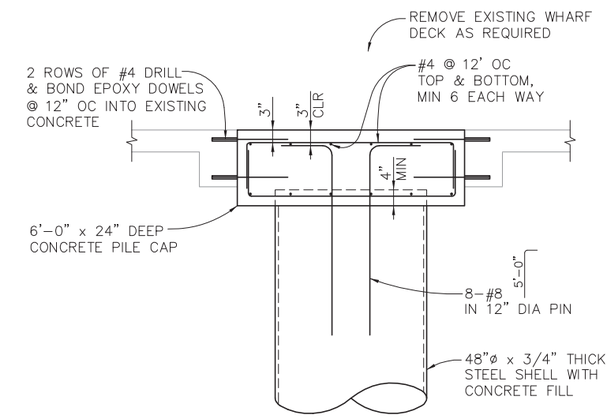

RETROFIT STEEL PILE

3 DETAIL
1/2" = 1'-0"

NOTES:

1. INCREASE SPALL REPAIR LIMITS WHERE REQUIRED TO ATTAIN 4" MIN BEYOND EDGE OF SPALL OR UNSOUND CONCRETE.

2. INCREASE CONCRETE COVER OVER EXIST REBAR TO 1" WHERE LESS THAN 1" COVER EXISTS. TAPER THICKNESS BEYOND WHERE REQUIRED AT 20:1 OR EXTEND TO FACE OF CURB. SAWCUT AT EDGE OF THICKENING AND REMOVE CONCRETE SO THAT NEW CONCRETE THICKNESS IS NEVER LESS THAN ¾" THICK.

PLAN CHECK SET/NOT FOR CONSTRUCTION (4/16/13)

OAKLAND GLOBAL
PORT OF OAKLAND · OAKLAND GLOBAL LLC · CITY OF OAKLAND
"one vision, one team, one project"

BIGGS CARDOSA ASSOCIATES INC
STRUCTURAL ENGINEERS
865 The Alameda
San Jose, California 95126
408-296-5515
BCA

JOB NO.	2011216.5
DRAWN BY:	S. HICKEY
CHECKED BY:	

REGISTERED PROFESSIONAL ENGINEER TROY M SWENSON No. 4620 Exp. 12/31/13 STRUCTURAL STATE OF CALIFORNIA

PROJECT INFO.

OAKLAND ARMY BASE WHARVES
REPAIR DETAILS No. 1

REV	DATE	COMMENT	CHECKED BY	C.O.O.
	04/15/13	35% SUBMITTAL		

DRAWING NO.
S17
SHEET ___ OF ___
SCALE: AS SHOWN
DATE: 04/15/13

W:\2011\2011216.5\2011216SS17.dwg PLOTTED Wednesday April 17, 2013 8:33AM BY JJD

(2011216SS17) 2011216.5

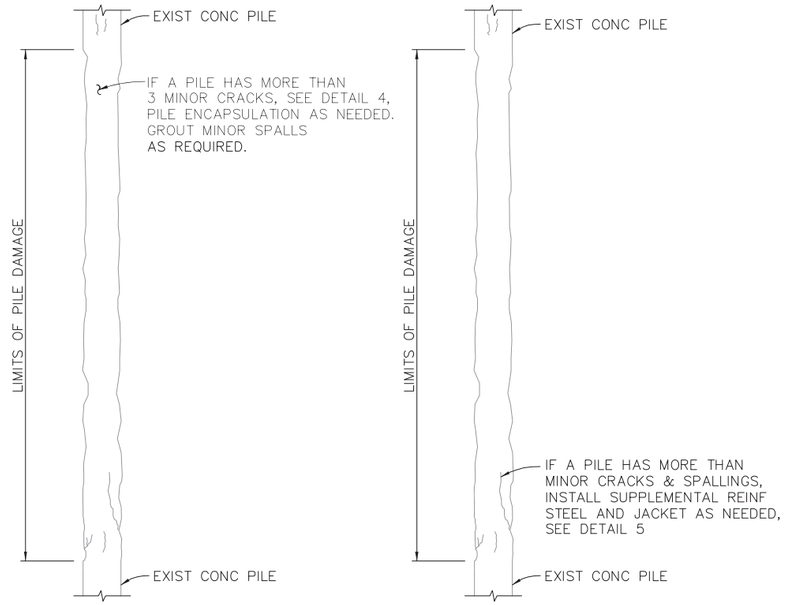

CONCRETE PILE EXISTING CONDITION
3/8" = 1'-0"

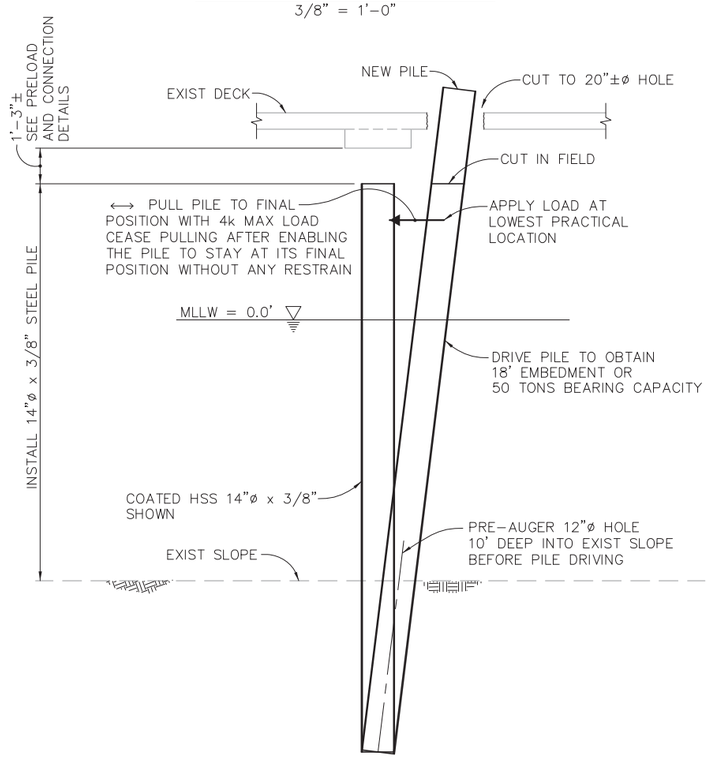

7 INSTALLING NEW PILE - UNDERPIN REPLACEMENT
3/8" = 1'-0"

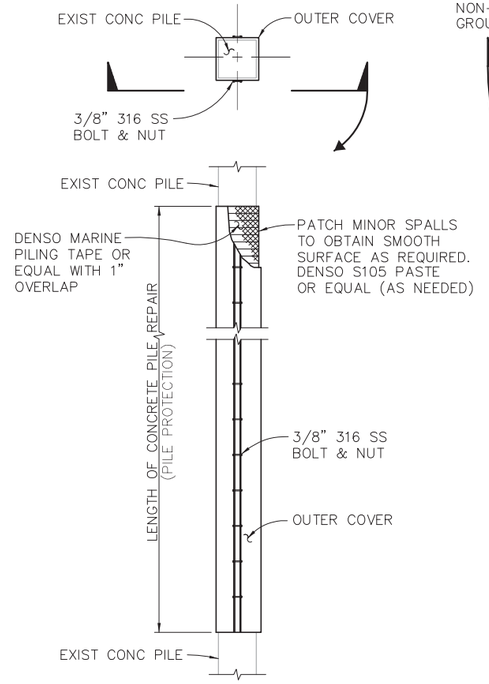

4 CONCRETE PILE PROTECTION
3/8" = 1'-0"

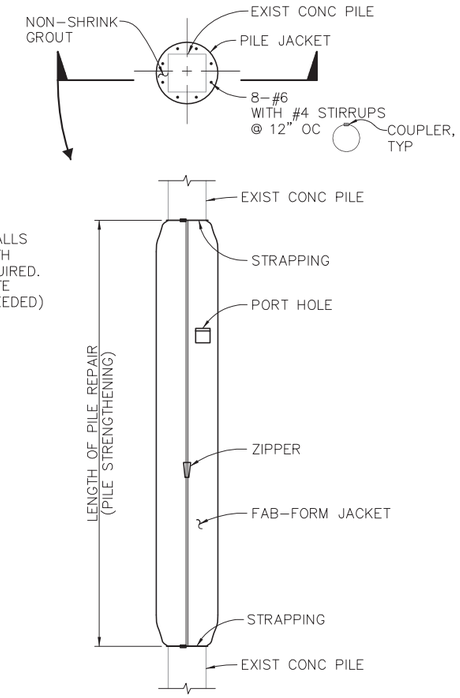

5 CONCRETE PILE STRENGTHENING
3/8" = 1'-0"

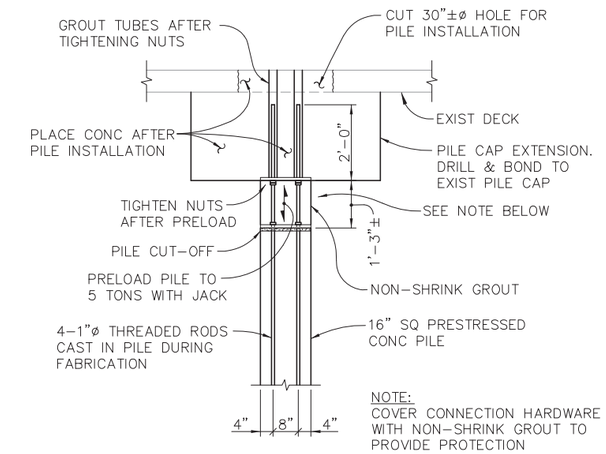

NOTE:
COVER CONNECTION HARDWARE WITH NON-SHRINK GROUT TO PROVIDE PROTECTION

(FOR MISSING TIMBER & CONCRETE PILES)

6 CONCRETE PILE REPLACEMENT
1/2" = 1'-0"

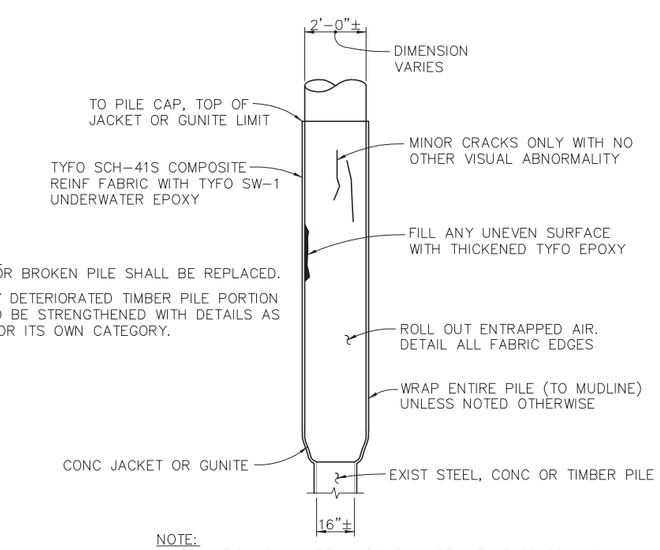

EXCEPTIONS:
1. MISSING OR BROKEN PILE SHALL BE REPLACED.
2. SEVERELY DETERIORATED TIMBER PILE PORTION NEEDS TO BE STRENGTHENED WITH DETAILS AS SHOWN FOR ITS OWN CATEGORY.

NOTE:
INSTALLATION SHALL BE IN COMPLIANCE WITH FYFE CO. LLC QUALITY CONTROL MANUAL.

8 CONCRETE JACKET/GUNITE REPAIR
3/8" = 1'-0" (MINOR DETERIORATION)

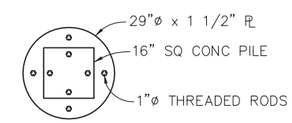

PLAN SECTION

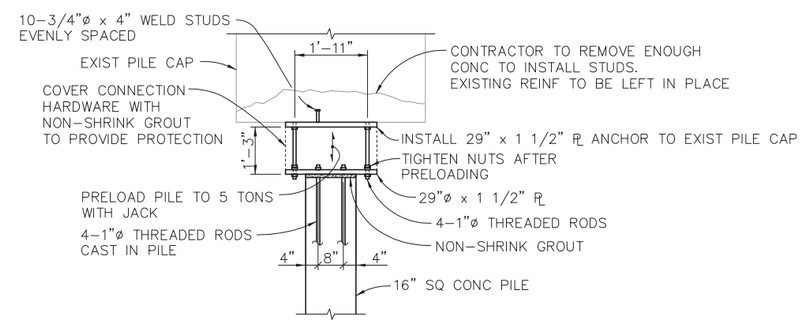

9 CONCRETE PILE CONNECTION TO EXISTING PILE CAP
1/2" = 1'-0"

PLAN CHECK SET/NOT FOR CONSTRUCTION (4/12/13)

OAKLAND GLOBAL
PORT OF OAKLAND · OAKLAND GLOBAL LLC · CITY OF OAKLAND
"one vision, one team, one project"

BIGGS CARDOSA ASSOCIATES INC
STRUCTURAL ENGINEERS
865 The Alameda
San Jose, California 95126
408-296-5515
BCA

JOB NO.	2011216.5
DRAWN BY:	S. HICKEY
CHECKED BY:	

REGISTERED PROFESSIONAL ENGINEER TROY M SWENSON No. 4620 Exp. 12/31/13 STRUCTURAL STATE OF CALIFORNIA

PROJECT INFO.

OAKLAND ARMY BASE WHARVES
REPAIR DETAILS No. 2

REV	DATE	COMMENT	CHECKED BY	C.O.O.
	04/15/13	35% SUBMITTAL		

DRAWING NO. S18
SHEET ___ OF ___
SCALE: AS SHOWN
DATE: 04/15/13

W:\2011\2011216.5\2011216.5S18.dwg PLOTTED Wednesday April 17, 2013 8:34AM BY JJD

2011216.5 (2011216.5S18)

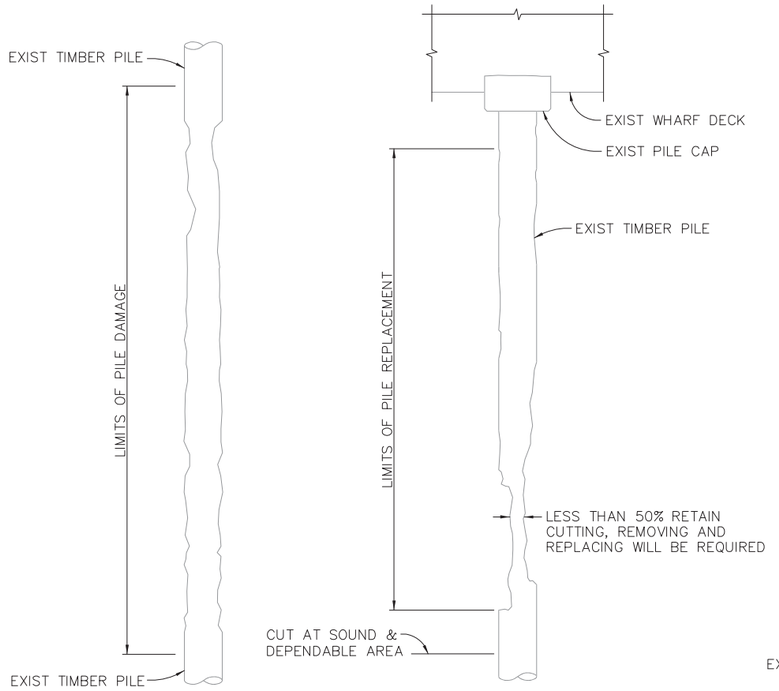

MINOR TO MAJOR SECTION LOSS (1% TO 50%), SEE DETAIL 10 OR DETAIL 11

SEVERE SECTION LOSS (GREATER THAN 50%), SEE DETAIL 12

TIMBER PILE
EXISTING CONDITION
3/8" = 1'-0"

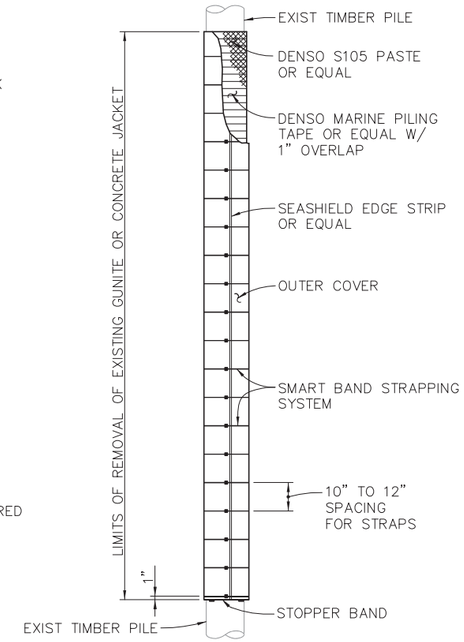

(FOR PILES WITH LESS THAN 10% SECTION LOSS)

10 TIMBER PILE PROTECTION
3/8" = 1'-0"

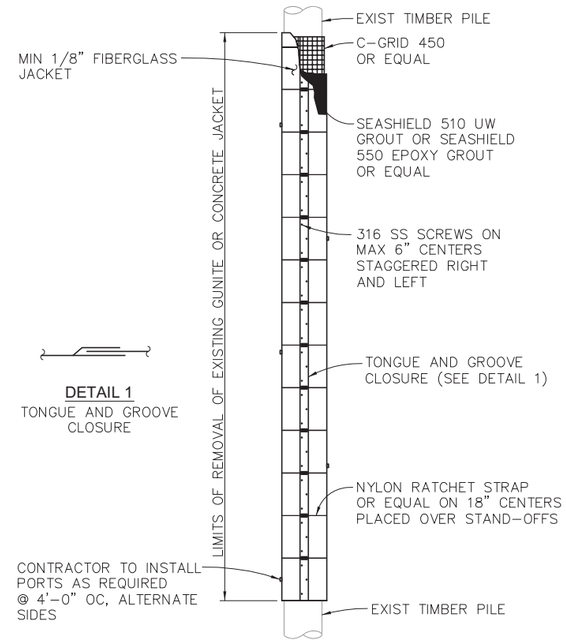

DETAIL 1
TONGUE AND GROOVE CLOSURE

(FOR PILES WITH GREATER THAN 10% SECTION LOSS BUT LESS THAN 50% SECTION LOSS)

11 TIMBER PILE STRENGTHENING
3/8" = 1'-0"

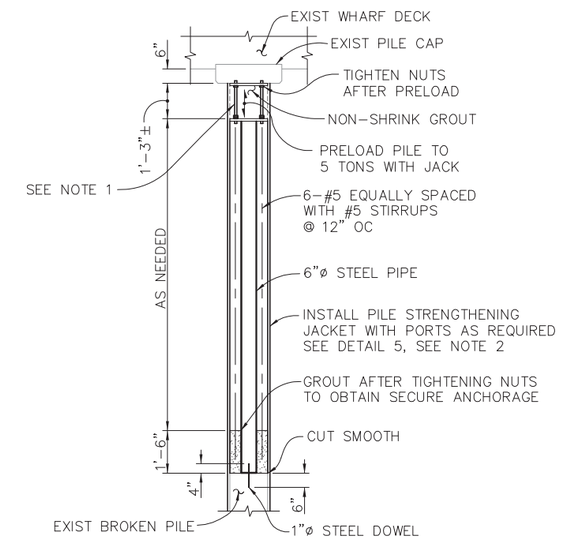

NOTES:
1. COVER CONNECTION HARDWARE WITH NON-SHRINK GROUT TO PROVIDE PROTECTION.
2. SEE S18 FOR DETAIL 5.
3. SEE DETAIL 9 ON S18 FOR CONNECTION TO EXISTING PILECAP.

12 PILE STUBBING
3/8" = 1'-0"

PLAN CHECK SET/NOT FOR CONSTRUCTION (4/16/13)

OAKLAND GLOBAL
PORT OF OAKLAND · OAKLAND GLOBAL LLC · CITY OF OAKLAND
"one vision, one team, one project"

BIGGS CARDOSA ASSOCIATES INC
STRUCTURAL ENGINEERS
865 The Alameda
San Jose, California 95126
408-296-5515

JOB NO.	2011216.5
DRAWN BY:	S. HICKEY
CHECKED BY:	

REGISTERED PROFESSIONAL ENGINEER
TROY M SWENSON
No. 4620
Exp. 12/31/13
STRUCTURAL
STATE OF CALIFORNIA

PROJECT INFO.

OAKLAND ARMY BASE WHARVES
REPAIR DETAILS No. 3

REV	DATE	COMMENT	CHECKED BY	C.O.O.
	04/15/13	35% SUBMITTAL		

DRAWING NO.
S19
SHEET ___ OF ___
SCALE: AS SHOWN
DATE: 04/15/13

W:\2011\2011216.5\2011216SS19.dwg PLOTTED Wednesday April 17, 2013 8:34AM BY JJD

2011216.5 (2011216SS19)

NOTES:

1. SEE PARTIAL PLANS ON SHEET S21 FOR DETAILS NOT SHOWN.

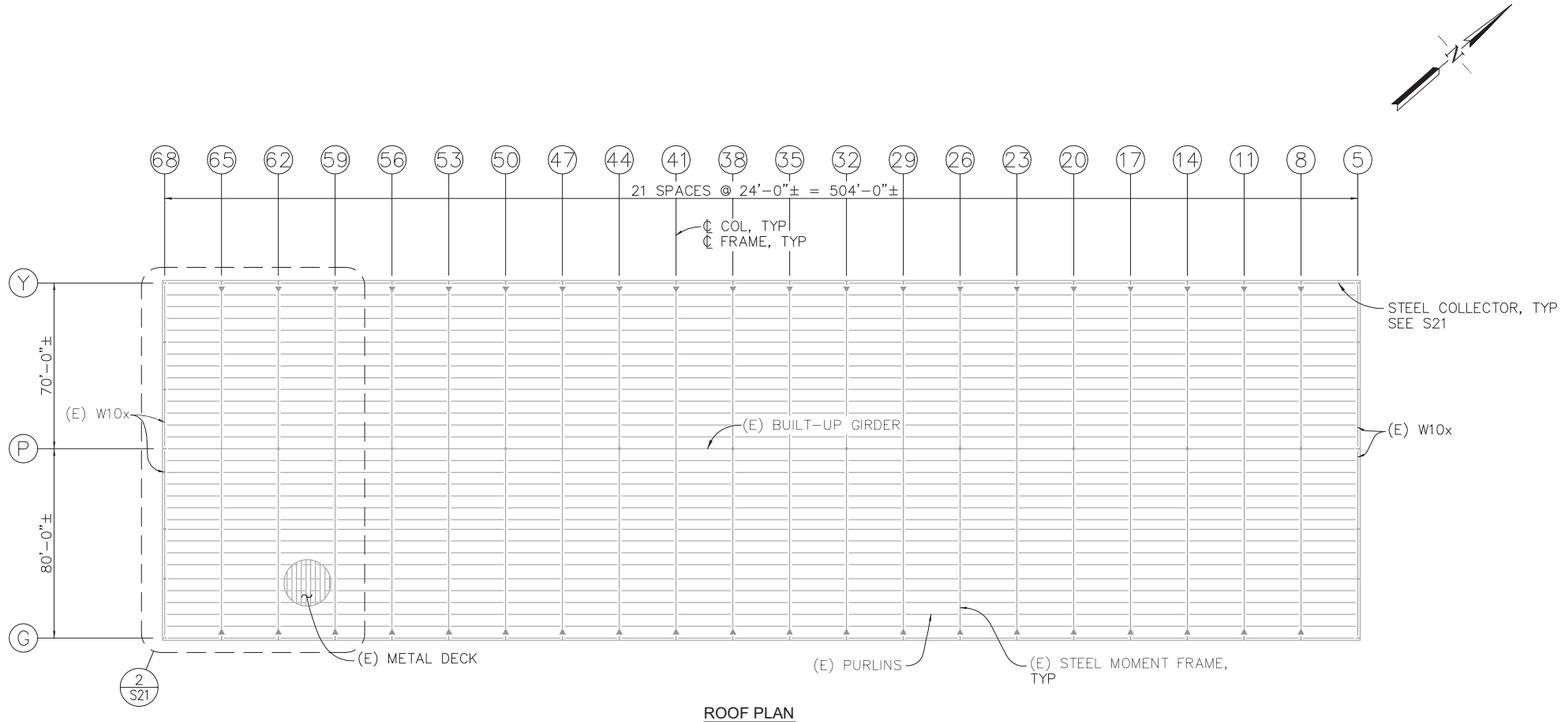

ROOF PLAN
1/32" = 1'-0"

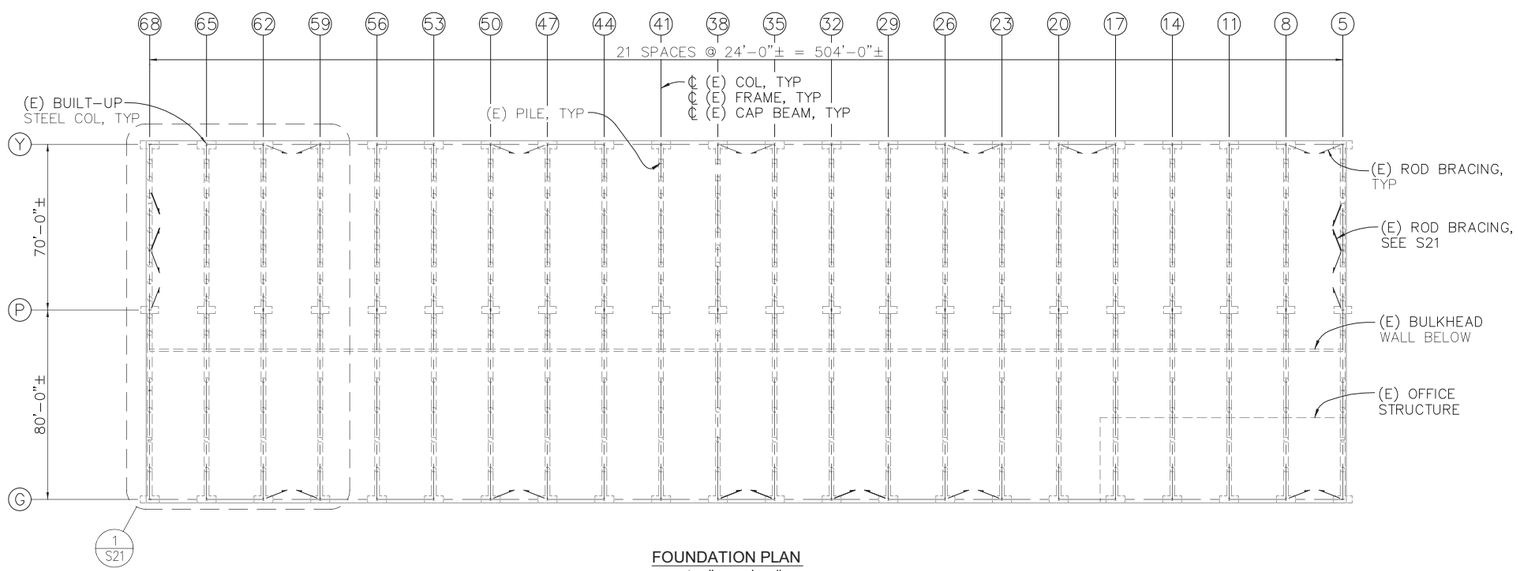

FOUNDATION PLAN
1/32" = 1'-0"

PLAN CHECK SET/NOT FOR CONSTRUCTION (4/12/13)

OAKLAND GLOBAL

PORT OF OAKLAND · OAKLAND GLOBAL LLC · CITY OF OAKLAND

"one vision, one team, one project"

BIGGS CARDOSA ASSOCIATES INC
STRUCTURAL ENGINEERS

865 The Alameda
San Jose, California 95126
408-296-5515

BCA

JOB NO.	2011216.5
DRAWN BY:	S. HICKEY
CHECKED BY:	

REGISTERED PROFESSIONAL ENGINEER
TROY M SWENSON
No. 4620
Exp. 12/31/13
STRUCTURAL
STATE OF CALIFORNIA

PROJECT INFO.

OAKLAND ARMY BASE WHARVES
BUILDING 161 SEISMIC UPGRADE No. 1

REV	DATE	COMMENT	CHECKED BY	C.O.O.
	04/15/13	35% SUBMITTAL		

DRAWING NO.
S20
SHEET ___ OF ___

SCALE:	AS SHOWN
DATE:	04/15/13

W:\2011\2011216.5\2011216S20.dwg PLOTTED Wednesday April 17, 2013 8:34AM BY JJD

2011216.5 (2011216S20)

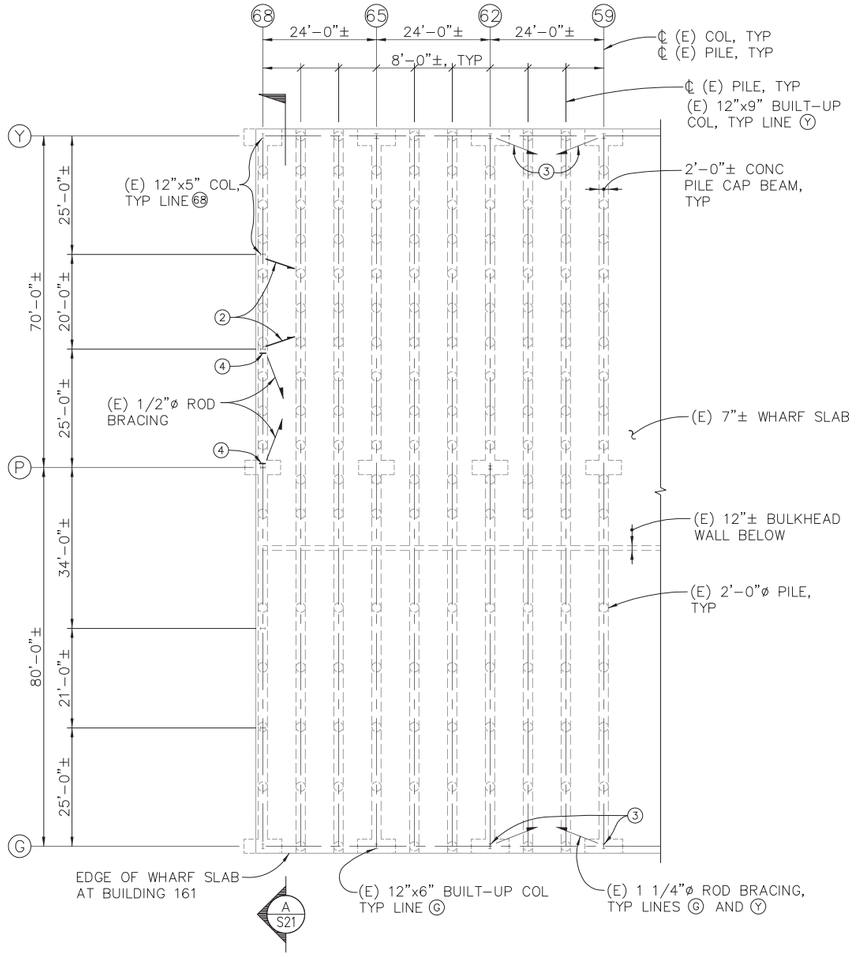

1 S21 PARTIAL FOUNDATION PLAN
1/16" = 1'-0"

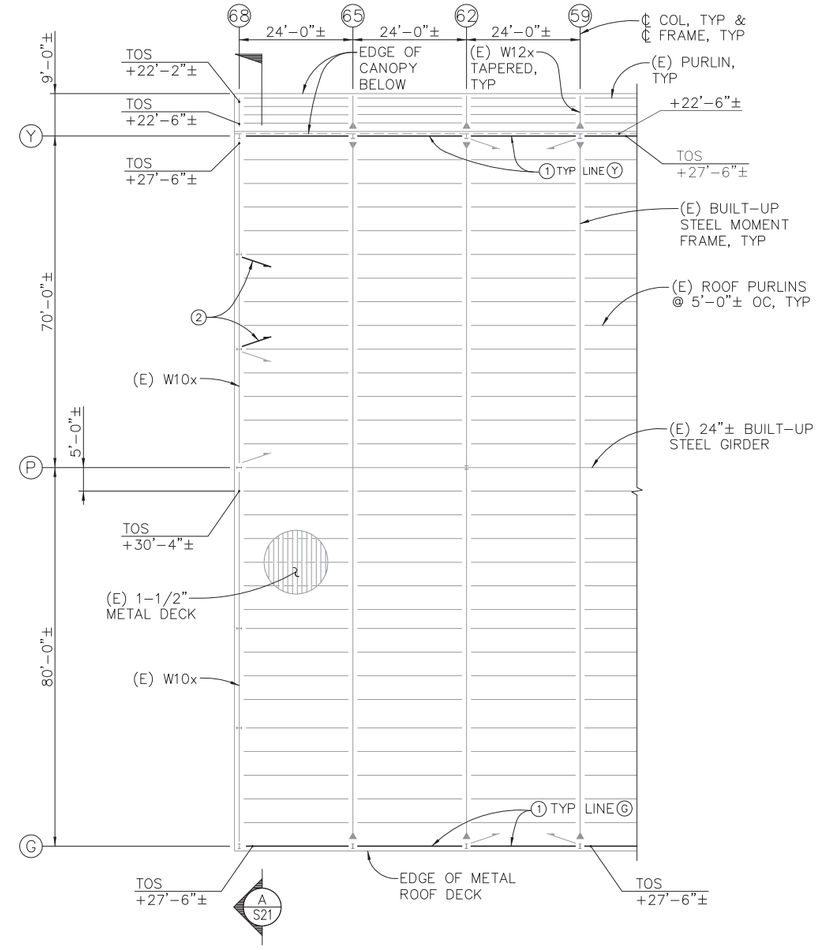

2 S21 PARTIAL ROOF PLAN
1/16" = 1'-0"

RETROFIT NOTES:

1. INDICATES NEW W8x35 STEEL COLLECTOR AT ROOF.
2. INDICATES NEW 1"ø STEEL ROD BRACING.
3. INDICATES NEW STEEL BASE PLATE AND EPOXY THREADED RODS INTO (E) FOUNDATION.
4. INDICATES NEW STIFFENER PLATES AT (E) COLUMN TO (E) ROD CONNECTION.

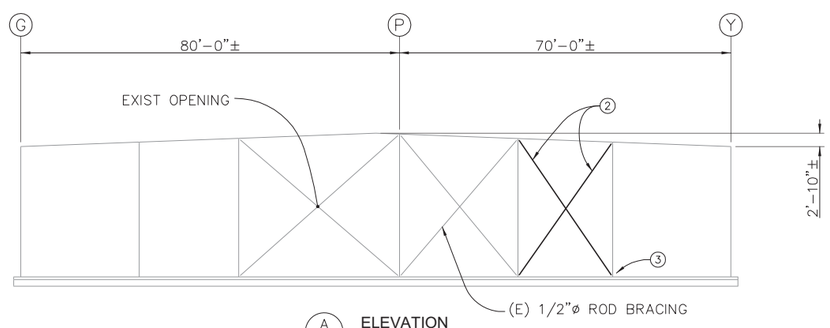

A S21 ELEVATION
1/16" = 1'-0"

PLAN CHECK SET/NOT FOR CONSTRUCTION (4/12/13)

OAKLAND GLOBAL
PORT OF OAKLAND
CITY OF OAKLAND
"one vision, one team, one project"

BIGGS CARDOSA ASSOCIATES INC
STRUCTURAL ENGINEERS
865 The Alameda
San Jose, California 95126
408-296-5515

JOB NO.	2011216.5
DRAWN BY:	S. HICKEY
CHECKED BY:	

REGISTERED PROFESSIONAL ENGINEER
TROY M SWENSON
No. 4620
Exp. 12/31/13
STRUCTURAL
STATE OF CALIFORNIA

PROJECT INFO.

OAKLAND ARMY BASE WHARVES
BUILDING 161 SEISMIC UPGRADE No. 2

REV	DATE	COMMENT	CHECKED BY	C.O.O.
	04/15/13	35% SUBMITTAL		

DRAWING NO.
S21
SHEET ___ OF ___

SCALE:	AS SHOWN
DATE:	04/15/13

W:\2011\2011216.5\20112165S21.dwg PLOTTED Wednesday April 17, 2013 8:35AM BY JJD

2011216.5 (20112165SS21)

Appendix D
Materials Investigation and Testing Report

TESTING ENGINEERS, INC.

Quality Assurance Services
Materials Consulting
Since 1954

January 28, 2013 *TEI Job No. E0004*

Mr. Sikandar Hayat
Biggs Cardosa Associates, Inc.
101 California Street, Suite 875
San Francisco, CA 94111

SUBJECT: ***Wharf Slab Investigation,***
Oakland Army Base Piers 6, 6 ½, and 7
Oakland, California

Dear Mr. Hayat,

At your request, Testing Engineers, Inc. has conducted an investigation of the wharf slab at the Oakland Army Base, piers 6, 6 ½, and 7. This testing of the wharf concrete was performed to determine the general reinforcing steel configuration and bar sizes, as well as the concrete strength in the tested areas.

During our initial site walk on the morning of January 17th, we were asked to perform Schmidt Hammer testing of the concrete. I want to reinforce that while we typically use the Schmidt Hammer as a method to verify consistency in cementitious material, we do not use it to provide absolute values for strength. Having said that, the values we measured (at 18 locations) were very consistent over an extremely large area.

We were also asked to use Ferroscan digital imaging equipment to provide bar spacing and sizing on both the top and under sides of the slab. As with the Schmidt Hammer, we do not rely on Ferroscan readings to determine bar size, but rather prefer to expose the steel and measure the size directly. Thus, we are providing the bar sizes based on the Ferroscan readings. As with the Schmidt Hammer results, the Ferroscan bar sizes are very consistent. In addition, there were several bars exposed on the top and underside of the slab that matched the general Ferroscan results. Please note that the general configuration of the wharves is concrete beams atop pilings running perpendicular to the edge of the shoreline. Thus we will use the term "between beams" and "along beams" to identify the reinforcement. Typically, the spacing of reinforcement spanning between the beams is much tighter than the reinforcement placed parallel to the beams.

We were provided with two documents regarding desired testing and locations, the Materials Testing – Scope of Work (BCA Job No. 2011216.5, dated 1-16-2013) and the Material Testing Markup, dated 01-11-2013. These documents can be found at the end of this report.

Due to time constraints (begin work 1-17, finish by COB 1-18), we were unable to complete all the required testing. However, we were able to determine approximate concrete strengths, top mat rebar spacing and bar sizes at 16 locations on the top of the slab, and similar testing at two locations on the bottom of the slab (the under-slab locations at Wharf 7 could not be tested due to height limitations, as well as the western location beneath Wharf 6) . These 18 locations are shown on the Testing Locations drawing at the end of this report.

Our results are provided in Table 1 starting on the next page.

If you have any questions, or if we may be of further service, please contact me at (510) 835-3142.

TESTING ENGINEERS, INC.

Peter M. Grossman, P.E.
Manager, Consulting Division

Corporate Office – 2811 Teagarden Street – San Leandro, California 94577 – (510) 835-3142 – FAX (510) 834-3777
North/East Bay – 827 Arnold Drive, Bay 4 – Martinez, California 94553 – (925) 370-7000 – FAX (925) 229-2951

TABLE 1

LOCATION T1

Shmidt Hammer Readings

41
42
46
49
43

Average	**44**
Standard Deviation	**3.3**
Estimated Concrete Strength	**6600 psi**
Bar Spacing Between Beams	**8" - 12"**
Bar Spacing Along Beams	**12" - 14"**
Estimated Concrete Cover	**3" - 4"**
Estimated Bar Size	**#4**

LOCATION T2

Shmidt Hammer Readings

42
52
46
42
38

Average	**44**
Standard Deviation	**5.3**
Estimated Concrete Strength	**6600 psi**
Bar Spacing Between Beams	**~ 12"**
Bar Spacing Along Beams	**8" - 12"**
Estimated Concrete Cover	**2.5" - 3"**
Estimated Bar Size	**#4**

LOCATION T3

Shmidt Hammer Readings

46
44
45
39
41

Average	**43**
Standard Deviation	**2.9**
Estimated Concrete Strength	**6250 psi**
Bar Spacing Between Beams	**4" - 6"**
Bar Spacing Along Beams	**8" - 12"**
Estimated Concrete Cover	**3" - 4"**
Estimated Bar Size	**#4**

LOCATION T4

Shmidt Hammer Readings

37
44
39
39
40

Average	**40**	
Standard Deviation	**2.6**	
Estimated Concrete Strength	**5600 psi**	
Bar Spacing Between Beams	**5" - 18"**	(varied by location)
Bar Spacing Along Beams	**18"**	
Estimated Concrete Cover	**2" - 3"**	
Estimated Bar Size	**#4**	

GPR noted bottom mat @ ~7", 6" x 12" pattern, no bar size est.

LOCATION T5

Shmidt Hammer Readings

53
47
38
40
42

Average	**44**
Standard Deviation	**6.0**
Estimated Concrete Strength	**6600 psi**
Bar Spacing Between Beams	**8"**
Bar Spacing Along Beams	**8"**
Estimated Concrete Cover	**~4"**
Estimated Bar Size	**na**

LOCATION T6

Shmidt Hammer Readings

36
44
44
36
40

Average	**40**
Standard Deviation	**4.0**
Estimated Concrete Strength	**5600 psi**
Bar Spacing Between Beams	**8" - 12"**
Bar Spacing Along Beams	**12" - 14"**
Estimated Concrete Cover	**3" - 4"**
Estimated Bar Size	**#4**

GPR noted stirrups for beam @ 4" oc, no bar size est. 3 longitudinal bars with 4" - 5" cover. Beam appears to be more than 15" deep

The results printed in this report relate only to the item(s) tested. This report can be reproduced only in its entirety unless written permission from TEI is obtained.

LOCATION T7

Shmidt Hammer Readings

48	
45	
45	
51	
38	
Average	**45**
Standard Deviation	**4.8**
Estimated Concrete Strength	**7000 psi**
Bar Spacing Between Beams	**12"**
Bar Spacing Along Beams	**12"**
Estimated Concrete Cover	**5+ "**
Estimated Bar Size	**na**

LOCATION T8

Shmidt Hammer Readings

48	46		
45	38		
40	32		
42	36		
46	31	**Slab**	**Beam**
Average		**44**	**37**
Standard Deviation		**3.2**	**6.0**
Estimated Concrete Strength		**6600 psi**	**5000 psi**
Bar Spacing Between Beams		**5"**	**2 bars bottom of beam**
Bar Spacing Along Beams		**12" - 14"**	
Estimated Concrete Cover		**~2"**	**2"**
Estimated Bar Size		**#4**	**#5**

LOCATION T9

Shmidt Hammer Readings

46	50		
48	47		
46	46		
49	51		
46	48	**Slab**	**Beam**
Average		**47**	**48**
Standard Deviation		**1.4**	**2.1**
Estimated Concrete Strength		**7500 psi**	**8000 psi**
Bar Spacing Between Beams		**12"**	**2 bars bottom of beam**
Bar Spacing Along Beams		**12" - 14"**	
Estimated Concrete Cover		**4+"**	**2"**
Estimated Bar Size		**na**	**#5**

LOCATION T10

Shmidt Hammer Readings

42	
35	
46	
38	
48	
Average	**42**
Standard Deviation	**5.4**
Estimated Concrete Strength	**6200 psi**
Bar Spacing Between Beams	**4"**
Bar Spacing Along Beams	**8"**
Estimated Concrete Cover	**3" - 4"**
Estimated Bar Size	**#4**

LOCATION T11

Shmidt Hammer Readings

48	
56	
52	
38	
36	
Average	**46**
Standard Deviation	**8.7**
Estimated Concrete Strength	**7200 psi**
Bar Spacing Between Beams	**16"**
Bar Spacing Along Beams	**16"**
Estimated Concrete Cover	**5+"**
Estimated Bar Size	**na**

LOCATION T12

Shmidt Hammer Readings

36	
38	
44	
42	
32	
Average	**38**
Standard Deviation	**4.8**
Estimated Concrete Strength	**5200 psi**
Bar Spacing Between Beams	**6"**
Bar Spacing Along Beams	**8"**
Estimated Concrete Cover	**4+"**
Estimated Bar Size	**#4**

LOCATION T13

Shmidt Hammer Readings

38	
44	
42	
44	
42	
Average	**42**
Standard Deviation	**2.4**
Estimated Concrete Strength	**6200 psi**
Bar Spacing Between Beams	**4"**
Bar Spacing Along Beams	**4"**
Estimated Concrete Cover	**3" - 4"**
Estimated Bar Size	**#4**

LOCATION T14

Shmidt Hammer Readings

40	
40	
28	
38	
34	
Average	**36**
Standard Deviation	**5.1**
Estimated Concrete Strength	**4700 psi**
Bar Spacing Between Beams	**16"**
Bar Spacing Along Beams	**16"**
Estimated Concrete Cover	**5"**
Estimated Bar Size	**na**

LOCATION T15

Shmidt Hammer Readings

48	
45	
46	
49	
46	
Average	**47**
Standard Deviation	**1.6**
Estimated Concrete Strength	**7500 psi**
Bar Spacing Between Beams	**~4"**
Bar Spacing Along Beams	**~12"**
Estimated Concrete Cover	**5"**
Estimated Bar Size	**na**

LOCATION T16

Shmidt Hammer Readings

54	
40	
39	
43	
39	
Average	**43**
Standard Deviation	**6.4**
Estimated Concrete Strength	**6500 psi**
Bar Spacing Between Beams	**5" - 6"**
Bar Spacing Along Beams	**16"**
Estimated Concrete Cover	**3"**
Estimated Bar Size	**#4**

LOCATION T17

Shmidt Hammer Readings

40	
50	
48	
44	
56	
Average	**48**
Standard Deviation	**6.1**
Estimated Concrete Strength	**7700 psi**
Bar Spacing Between Beams	**4"**
Bar Spacing Along Beams	**12"**
Estimated Concrete Cover	**3" - 4"**
Estimated Bar Size	**#4**

LOCATION T18

Shmidt Hammer Readings

40	
42	
37	
38	
44	
Average	**40**
Standard Deviation	**2.9**
Estimated Concrete Strength	**5700 psi**
Bar Spacing Between Beams	**4" - 6"**
Bar Spacing Along Beams	**12" - 14"**
Estimated Concrete Cover	**3" - 4"**
Estimated Bar Size	**#4**

TESTING ENGINEERS, INC.

Quality Assurance Services
Materials Consulting
Since 1954

April 16, 2013

TEI Job No. E0008

Mr. Troy Swenson
Biggs Cardosa Associates, Inc.
101 California Street, Suite 875
San Francisco, CA 94111

SUBJECT: ***Wharf Investigation, Oakland Army Base***
Oakland, California

Dear Mr. Swenson

At your request, Testing Engineers, Inc. has conducted an extensive materials investigation at the Oakland Army Base wharves. This testing included ground-penetrating radar inspection of reinforcing steel placement and spacing, concrete strengths, and reinforcing steel properties. Much of the investigation was centered on the wharf decks, but pier caps, beams, and bulkhead wall locations were also studied.

We were provided with maps detailing desired testing and locations, which we have modified to detail our testing locations and descriptors.

Our results are provided following this letter.

If you have any questions, or if we may be of further service, please contact me at (510) 835-3142.

TESTING ENGINEERS, INC.

Peter M. Grossman, P.E.
Manager, Consulting Division

OAKLAND ARMY BASE WHARVES

TESTING LOCATION MAPS

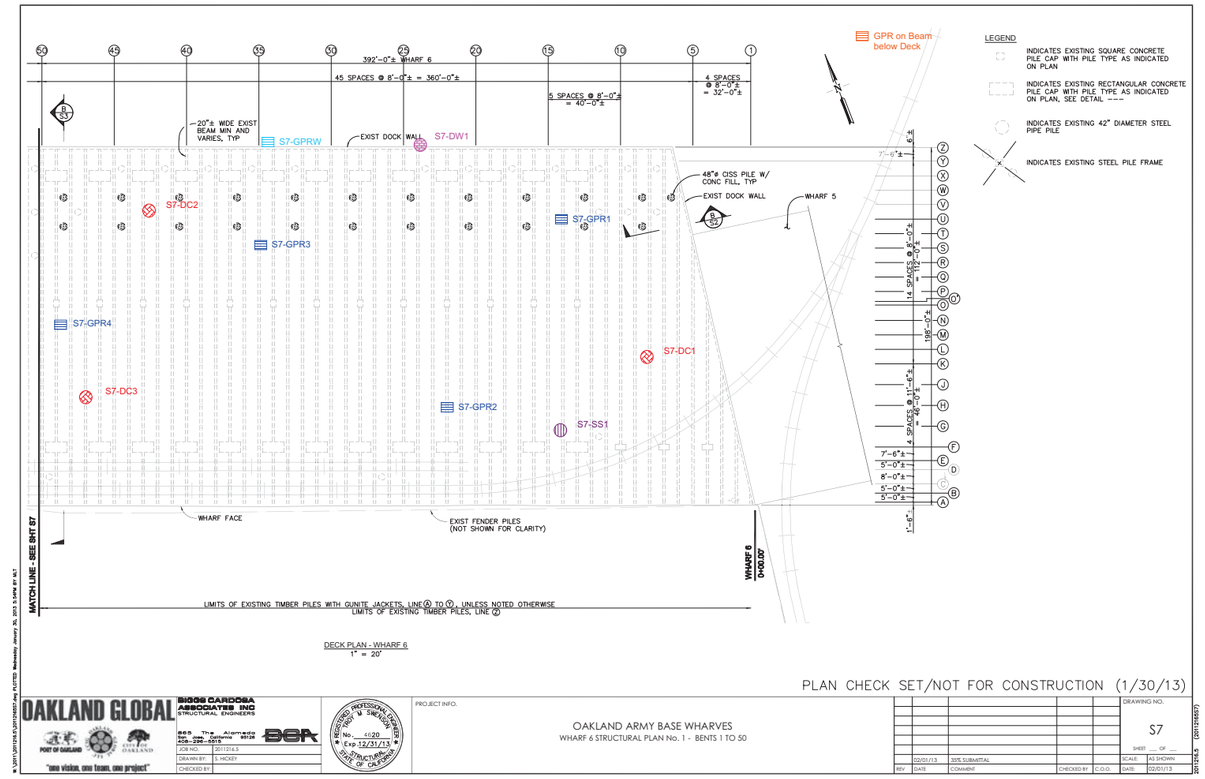

PLAN CHECK SET/NOT FOR CONSTRUCTION (1/30/13)

OAKLAND GLOBAL

"one vision, one team, one project"

BIGGS CARDOSA ASSOCIATES INC
STRUCTURAL ENGINEERS
865 The Alameda
San Jose, California 95126
408-296-5515

JOB NO.	201216.5
DRAWN BY:	S. HICKEY
CHECKED BY:	

REGISTERED PROFESSIONAL ENGINEER — BRADY M. SNEDDON — No. 4020 — Exp. 12/31/13 — STRUCTURAL — STATE OF CALIFORNIA

PROJECT INFO.

OAKLAND ARMY BASE WHARVES
WHARF 6 STRUCTURAL PLAN No. 1 - BENTS 1 TO 50

REV	DATE	COMMENT	CHECKED BY	C.O.O.
	02/01/13	35% SUBMITTAL		

DRAWING NO. S7
SHEET ___ OF ___
SCALE: AS SHOWN
DATE: 02/01/13
201216.5 (201216S07)

W:\201\201216.5\201216S07.dwg PLOTTED Wednesday January 30, 2013 3:14PM BY MLT

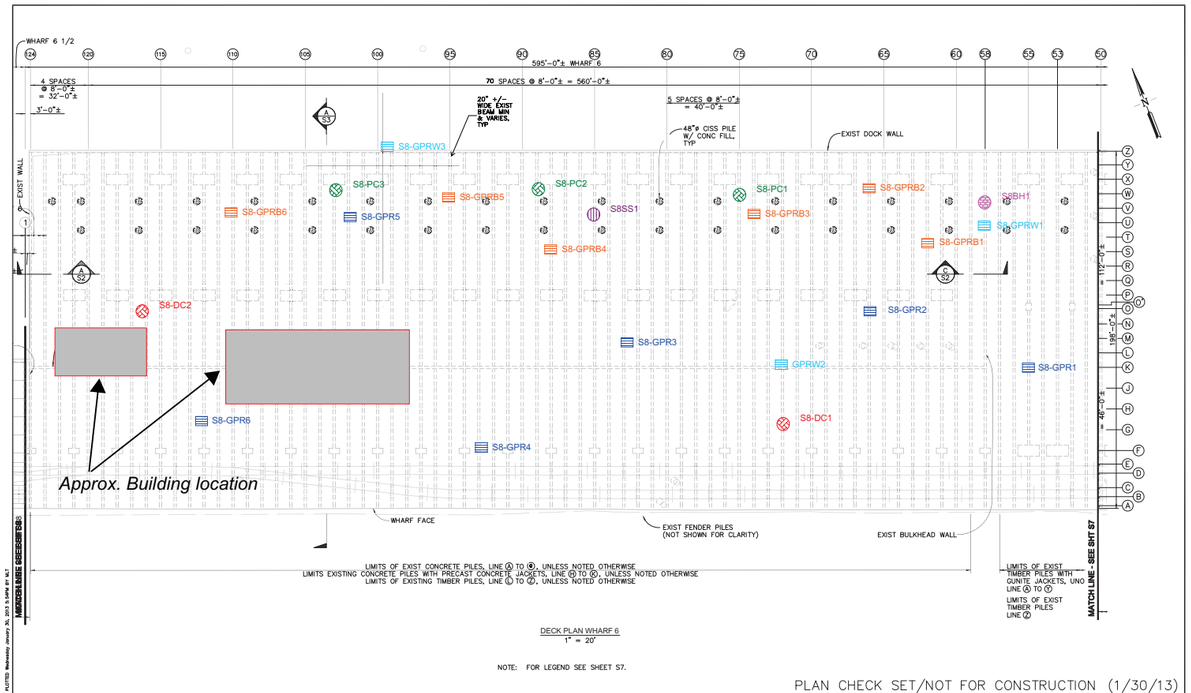

DECK PLAN WHARF 6
1" = 20'

NOTE: FOR LEGEND SEE SHEET S7.

PLAN CHECK SET/NOT FOR CONSTRUCTION (1/30/13)

OAKLAND GLOBAL
"one vision, one team, one project"

BIGGS CARDOSA ASSOCIATES INC
STRUCTURAL ENGINEERS
865 The Alameda
San Jose, CA 95126
408-296-6616

JOB NO. 201121.6.5
DRAWN BY: S. HICKEY
CHECKED BY:

REGISTERED PROFESSIONAL ENGINEER
STEVEN V. SHEPHERD
No. 4620
Exp 12/31/13
STATE OF CALIFORNIA

PROJECT INFO.

OAKLAND ARMY BASE WHARVES
WHARF 6 STRUCTURAL PLAN No. 2 - BENTS 51 TO 124

REV	DATE	COMMENT	CHECKED BY	C.O.D.
	02/01/13	35% SUBMITTAL		

DRAWING NO. S8
SHEET ___ OF ___
SCALE: AS SHOWN
DATE: 02/01/13

201121.6.5 (201121.6.5.6)

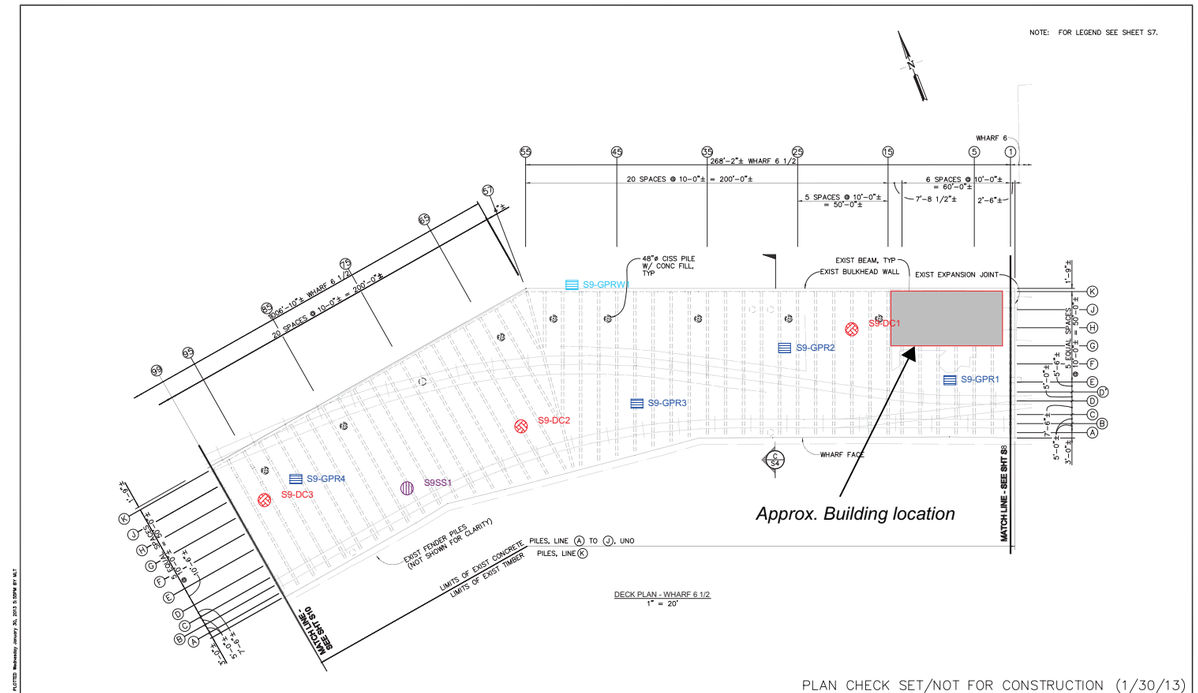

DECK PLAN - WHARF 6 1/2
1" = 20'

PLAN CHECK SET/NOT FOR CONSTRUCTION (1/30/13)

OAKLAND GLOBAL
"one vision, one team, one project"

BIGGS CARDOSA ASSOCIATES INC
STRUCTURAL ENGINEERS
865 The Alameda
San Jose, CA 95126
408-296-6616

JOB NO. 201121.6.5
DRAWN BY: S. HICKEY
CHECKED BY:

REGISTERED PROFESSIONAL ENGINEER
STEVEN V. SHEPHERD
No. 4620
Exp 12/31/13
STATE OF CALIFORNIA

PROJECT INFO.

OAKLAND ARMY BASE WHARVES
WHARF 6 1/2 STRUCTURAL PLAN No. 1 - BENTS 1 TO 99

REV	DATE	COMMENT	CHECKED BY	C.O.D.
	02/01/13	35% SUBMITTAL		

DRAWING NO. S9
SHEET ___ OF ___
SCALE: AS SHOWN
DATE: 02/01/13

201121.6.5 (201121.6.5.6)

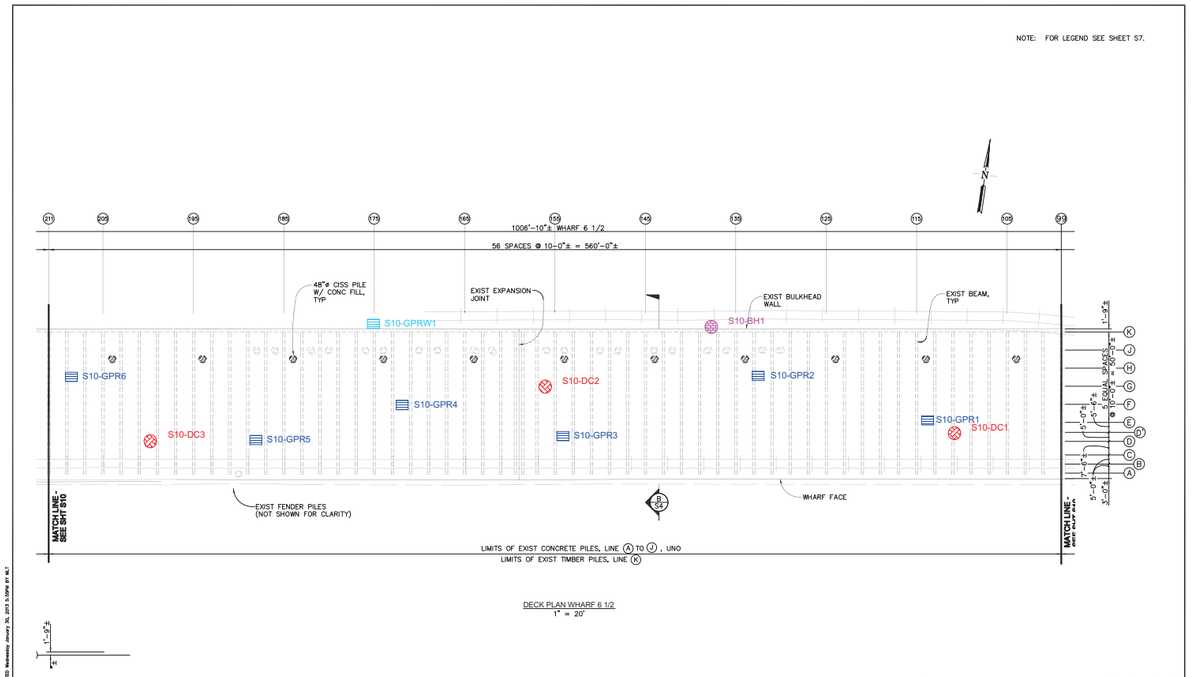

PLAN CHECK SET/NOT FOR CONSTRUCTION (1/30/13)

OAKLAND GLOBAL

BIGGS CARDOSA ASSOCIATES INC
STRUCTURAL ENGINEERS
865 The Alameda
San Jose, California 95126
408-296-5015

"one vision, one team, one project"

JOB NO.	2011216.5
DRAWN BY:	S. HICKEY
CHECKED BY:	

REGISTERED PROFESSIONAL ENGINEER
TROY M. SIMENSON
No. 4620
Exp. 12/31/13
STRUCTURAL
STATE OF CALIFORNIA

PROJECT INFO.

OAKLAND ARMY BASE WHARVES
WHARF 6 1/2 STRUCTURAL PLAN No. 2 - BENTS 101 TO 211

REV	DATE	COMMENT	CHECKED BY	C.O.D.
	02/01/13	35% SUBMITTAL		

DRAWING NO. S10
SHEET ___ OF ___
SCALE: AS SHOWN
DATE: 02/01/13

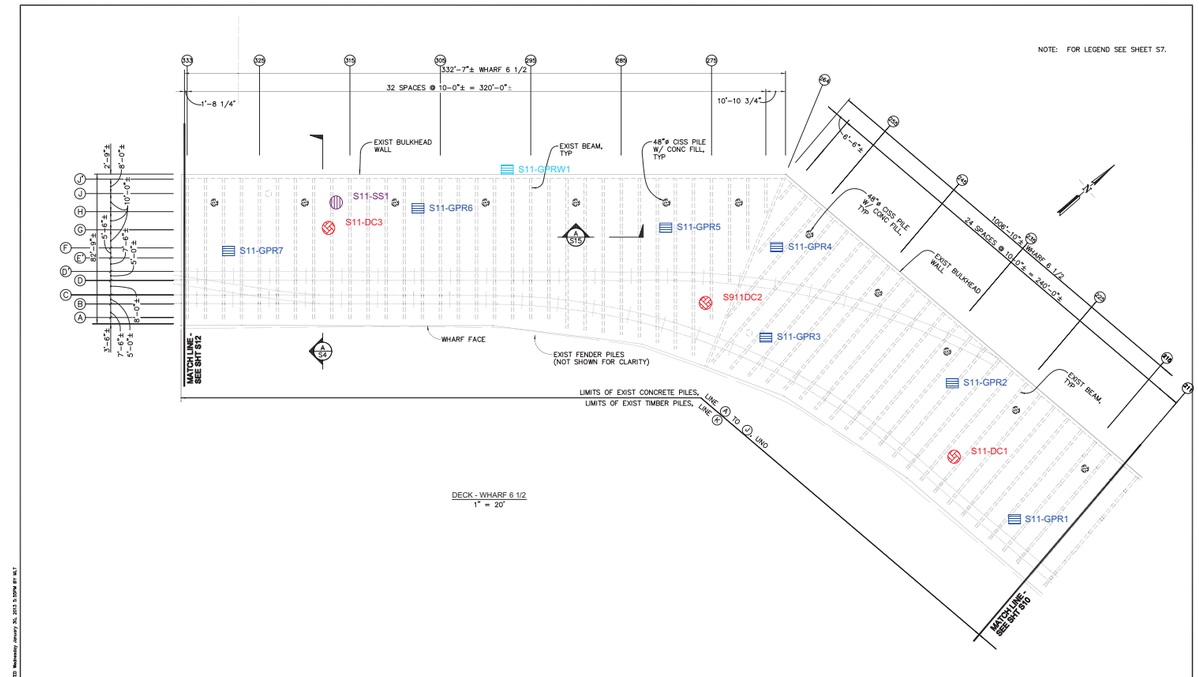

PLAN CHECK SET/NOT FOR CONSTRUCTION (1/30/13)

OAKLAND GLOBAL

BIGGS CARDOSA ASSOCIATES INC
STRUCTURAL ENGINEERS
865 The Alameda
San Jose, California 95126
408-296-5015

"one vision, one team, one project"

JOB NO.	2011216.5
DRAWN BY:	S. HICKEY
CHECKED BY:	

REGISTERED PROFESSIONAL ENGINEER
TROY M. SIMENSON
No. 4620
Exp. 12/31/13
STRUCTURAL
STATE OF CALIFORNIA

PROJECT INFO.

OAKLAND ARMY BASE WHARVES
WHARF 6 1/2 STRUCTURAL PLAN No. 3 - BENTS 213 TO 333

REV	DATE	COMMENT	CHECKED BY	C.O.D.
	02/01/13	35% SUBMITTAL		

DRAWING NO. S11
SHEET ___ OF ___
SCALE: AS SHOWN
DATE: 02/01/13

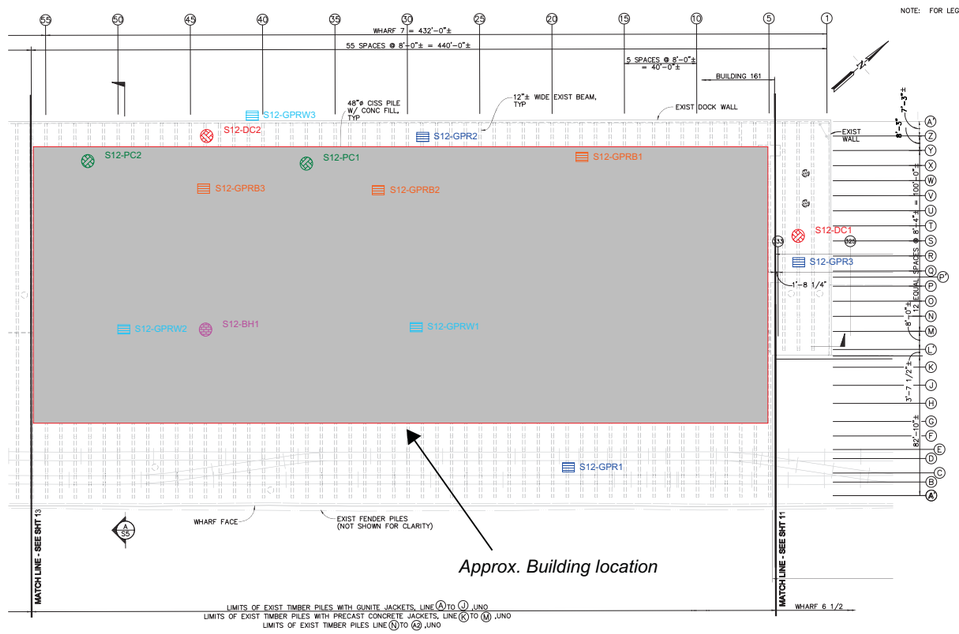

DECK PLAN WHARF 7
1" = 20'

PLAN CHECK SET/NOT FOR CONSTRUCTION (1/30/13)

OAKLAND GLOBAL
"one vision, one team, one project"

BIGGS CARDOSA ASSOCIATES INC
STRUCTURAL ENGINEERS
865 The Alameda
San Jose, California 95126
408-296-8215

JOB NO. 2011216.5
DRAWN BY: S. HICKEY
CHECKED BY:

REGISTERED PROFESSIONAL ENGINEER TODD M. SIMON No. 4620 Exp. 12/31/13 STRUCTURAL STATE OF CALIFORNIA

PROJECT INFO.

OAKLAND ARMY BASE WHARVES
WHARF 7 STRUCTURAL PLAN No. 1 - BENTS 1 TO 56

REV	DATE	COMMENT	CHECKED BY	C.O.O.
	02/01/13	35% SUBMITTAL		

DRAWING NO. S12
SHEET ___ OF ___
SCALE: AS SHOWN
DATE: 02/01/13

2011216.5 (201129.5512)

N:\2011\2011216.5\2012\NEED\Lisa PLOTTED Wednesday January 30, 2013 7:32PM BY: MJ

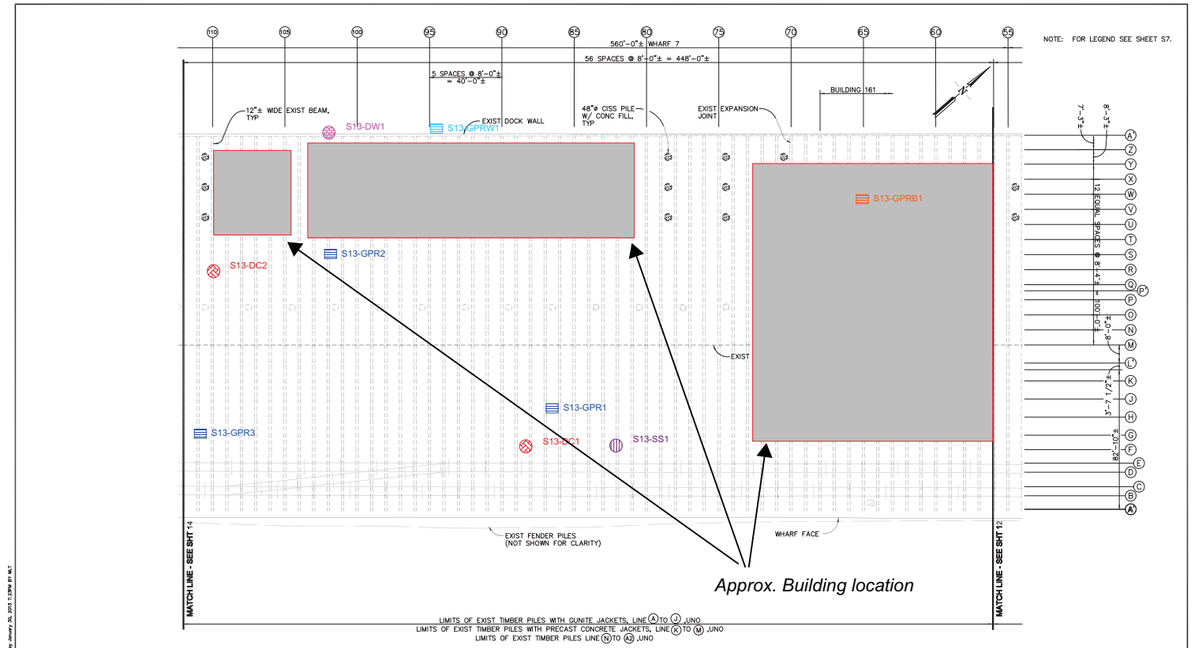

DECK PLAN WHARF 7
1" = 20'

PLAN CHECK SET/NOT FOR CONSTRUCTION (1/30/13)

OAKLAND GLOBAL
"one vision, one team, one project"

BIGGS CARDOSA ASSOCIATES INC
STRUCTURAL ENGINEERS
865 The Alameda
San Jose, California 95126
408-296-8215

JOB NO. 2011216.5
DRAWN BY: S. HICKEY
CHECKED BY:

REGISTERED PROFESSIONAL ENGINEER TODD M. SIMON No. 4620 Exp. 12/31/13 STRUCTURAL STATE OF CALIFORNIA

PROJECT INFO.

OAKLAND ARMY BASE WHARVES
WHARF 7 STRUCTURAL PLAN No. 2 - BENTS 57 TO 112

REV	DATE	COMMENT	CHECKED BY	C.O.O.
	02/01/13	35% SUBMITTAL		

DRAWING NO. S13
SHEET ___ OF ___
SCALE: AS SHOWN
DATE: 02/01/13

2011216.5 (201129.5512)

N:\2011\2011216.5\2012\NEED\Lisa PLOTTED Wednesday January 30, 2013 7:32PM BY: MJ

OAKLAND ARMY BASE WHARVES

GENERAL RESULTS

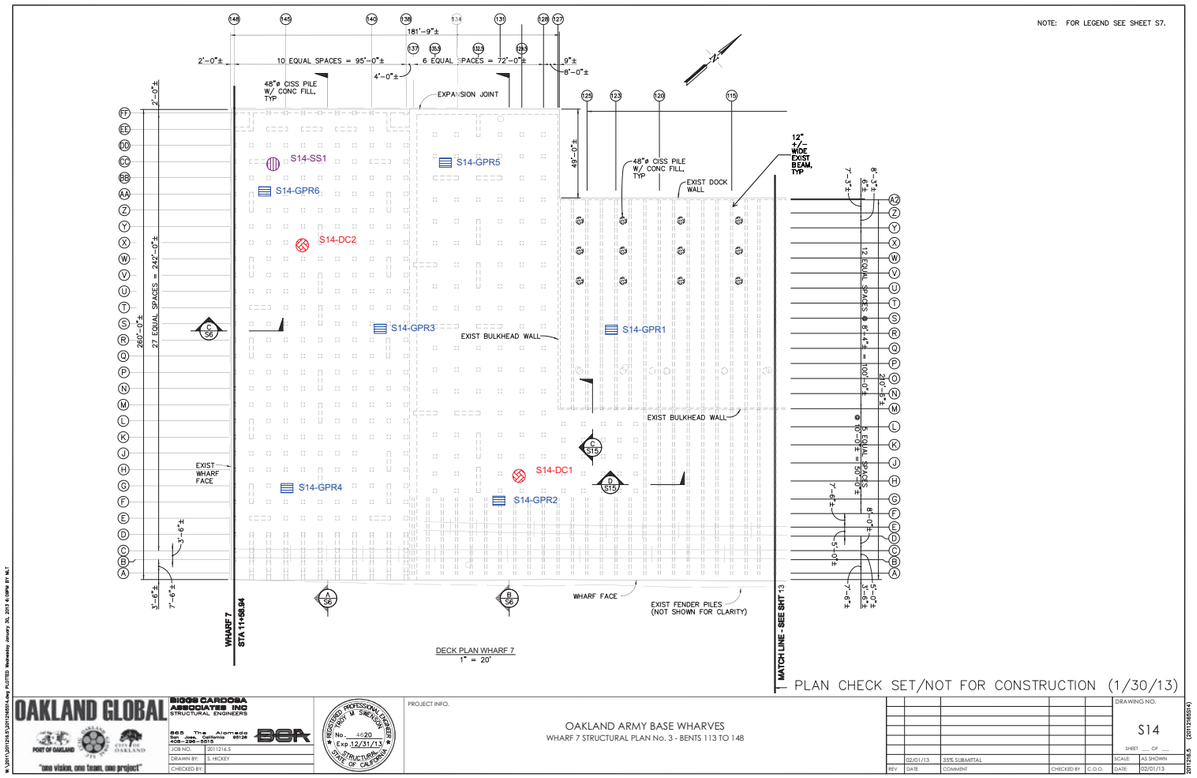

PLAN CHECK SET/NOT FOR CONSTRUCTION (1/30/13)

OAKLAND GLOBAL

"one vision, one team, one project"

RIGGS CARDOSA ASSOCIATES INC
STRUCTURAL ENGINEERS

865 The Alameda
San Jose, California 95126
408-296-5015

JOB NO. 2012-74.5
DRAWN BY: S. HICKEY
CHECKED BY:

REGISTERED PROFESSIONAL ENGINEER
No. 4920
Exp. 12/31/13
STRUCTURAL
STATE OF CALIFORNIA

PROJECT INFO.

OAKLAND ARMY BASE WHARVES
WHARF 7 STRUCTURAL PLAN No. 3 - BENTS 113 TO 148

REV	DATE	COMMENT	CHECKED BY	C.O.O.
	02/01/13	35% SUBMITTAL		

DRAWING NO. S14
SHEET ___ OF ___
SCALE: AS SHOWN
DATE: 02/01/13

2012-74.5 (2011-74-5S14)

N:\2011\2011-74.5\2011-74.5-S14.dwg PLOTTED: Wednesday, January 30, 2013 8:12:09PM BY: M.C.T

Sheet S7 Locations

- Core/Steel Locations

Page	Location Type	PSI	
S7-SS1	steel sample	-	**See Compressive Strength Results Tables for Complete results**
S7-DC1	core deck	6560	
S7-DC2	core deck	4980	
S7-DC3	core deck	5640	
S7-DW1	core dock wall	5830	

- GPR Locations

Loc. ID	Date	Top spacing	Bottom spacing	~thk.
S7-GPR1	3-22-13	10”-14” centers ea way	10”-14”n-s/ 3”-4”e-w	7”
S7-GPR2	3-22-13	10”-14” centers ea way	10”-14”n-s/ 3”-4”e-w	10”
S7-GPR3	3-22-13	10”-14” centers ea way	10”-14”n-s/ 3”-4”e-w	9”
S7-GPR4	3-22-13	10”-14” centers ea way	10”-14”n-s/ 3”-4”e-w	8”
S7-GPRW	3-28-13	10”-14” centers ea way		12”

Sheet S8 Locations

- Core/Steel Locations

Page	Location Type	PSI	
S8-DC1	core deck	6020	**See Compressive Strength Results Tables for Complete results**
S8-DC2	core deck	5460	
S8-SS1	steel sample	-	
S8-PC1	core pile cap	6520	
S8-PC2	core pile cap	8330	
S8-PC3	core pile cap	5840	
S8-BH1	core bulkhead	5760	

- GPR Scan Locations

Loc. ID	Date	Top spacing	Bottom spacing	~thk.
S8-GPR1	3-21-13	10”-14” centers ea way	10”-14”n-s/ 3”-4”e-w	8”
S8-GPR2	3-21-13	10”-14” centers ea way	10”-14”n-s/ 3”-4”e-w	n/a
S8-GPR3	3-21-13	10”-14” centers ea way	10”-14”n-s/ 3”-4”e-w	n/a
S8-GPR4	3-21-13	10”-14” centers ea way	10”-14”n-s/ 3”-4”e-w	n/a
S8-GPR5	3-21-13	10”-14” centers ea way	10”-14”n-s/ 3”-4”e-w	n/a
S8-GPR6	3-21-13	10”-14” centers ea way	10”-14”n-s/ 3”-4”e-w	n/a
S8-GPRW3	3-28-13	12 “ centers each way		n/a
S8-GPRW1	3-28-13	12 “ centers each way		n/a
S8-GPRW1	3-28-13	12 “ centers each way		n/a
S8-GPRB1	3-28-13	(4) bars at bottom	Stirrups 36” to 48” oc	
S8-GPRB2	3-28-13	(4) bars at bottom	Stirrups 36” to 48” oc	
S8-GPRB3	3-28-13	(4) bars at bottom	Stirrups 36” to 48” oc	
S8-GPRB4	3-28-13	(4) bars at bottom	Stirrups 36” to 48” oc	
S8-GPRB5	3-28-13	(4) bars at bottom	Stirrups 36” to 48” oc	
S8-GPRB6	3-28-13	(4) bars at bottom	Stirrups 36” to 48” oc	

Sheet S9 Locations

- Core/Steel Locations

Page	Location Type	PSI	
S9-DC1	core deck	5490	**See Compressive Strength Results Tables for Complete results**
S9-DC2	core deck	4770	
S9-DC3	core deck	5730	
S9-SS1	steel sample	-	

- GPR Scan Locations

Loc. ID	Date	Top spacing	bottom spacing	Thk.
S9-GPR1	3-22-13	-	8 to 10 inch centers	7”
S9-GPR2	3-22-13	10”-14” centers ea way	10”-14”n-s / 3”-4”e-w	9”
S9-GPR3	3-22-13	10”-14” centers ea way	10”-14”n-s / 3”-4”e-w	9”
S9-GPR4	3-22-13	10”-14” centers ea way	10”-14”n-s / 3”-4”e-w	10”
S9-GPRW1	3-28-13	12” centers each way		n/a

Sheet S10 Locations

- Core Locations

Page	Location Type	PSI	
S10-DC1	core deck	6360	**See Compressive Strength Results Tables for Complete results**
S10-DC2	core deck	5990	
S10-DC3	core deck	4310	
S10-BH1	core bulkhead	6870	

- GPR Scan Locations

Loc. ID	Date	Top spacing	Bottom spacing	~thk.
S10-GPR1	3-22-13	10”-14” centers ea way	10”-14”n-s/ 3”-4”e-w	10”
S10-GPR2	3-22-13	10”-14” centers ea way	10”-14”n-s/ 3”-4”e-w	9”
S10-GPR3	3-22-13	10”-14” centers ea way	10”-14” centers	9”
S10-GPR4	3-25-13	10”-14” centers ea way	10”-14”n-s/ 3”-4”e-w	8”
S10-GPR5	3-25-13	10”-14” centers ea way	10”-14”n-s/ 3”-4”e-w	9”
S10-GPR6	3-25-13	10”-14” centers ea way	10”-14”n-s/ 3”-4”e-w	8”
S9-GPRW1	3-28-13	12 “ centers each way		n/a

Oakland Army Base Wharf Check List

Sheet S11 Locations

- Core/Steel Locations

Page	Location Type	PSI	
S11-SS1	steel sample	-	**See Compressive Strength Results Tables for Complete results**
S11-DC1	core deck	5190	
S11-DC2	core deck	4740	
S11-DC3	core deck	6720	

- GPR Scan Locations

Loc. ID	Date	Top spacing	bottom spacing	Thk.
S11-GPR1	3-25-13	10”-14” centers ea way	10”-14”n-s/ 3”-4”e-w	9”
S11-GPR2	3-25-13	10”-14” centers ea way	10”-14”n-s/ 3”-4”e-w	10”
S11-GPR3	3-25-13	10”-14” centers ea way	10”-14”n-s/ 3”-4”e-w	9”
S11-GPR4	3-25-13	10”-14” centers ea way	10”-14”n-s/ 3”-4”e-w	9”
S11-GPR5	3-26-13	10”-14” centers ea way	10”-14”n-s/ 3”-4”e-w	9”
S11-GPR6	3-26-13	10”-14” centers ea way	10”-14”n-s/ 3”-4”e-w	9”
S11-GPR7	3-26-13	10”-14” centers ea way	10”-14”n-s/ 3”-4”e-w	9”
S11-GPRW1	3-26-13	12 “ centers each way		n/a

Sheet S12 Locations

- Core Locations

Page	Location Type	PSI	
S12-DC1	core deck	5610	**See Compressive Strength Results Tables for Complete results**
S12-DC2	core deck	6130	
S12-BH1	core bulkhead	5200	
S12-PC1	core pile cap	5100	
S12-PC2	core pile cap	5060	

- GPR Scan Locations

Loc. ID	Date	Top spacing	bottom spacing	Thk.
S12-GPR1	3-27-13	-	10””n-s/ 4”–6”e-w	n/a
S12-GPR2	3-27-13	10”-14” centers ea way	10”-14”n-s/ 3”-4”e-w	9”
S12-GPR3	3-27-13	10”-14” centers ea way	10”-14”n-s/ 3”-4”e-w	9”
S12-GPRW1	3-27-13	12 “ centers each way		n/a
S12-GPRW2	3-27-13	12 “ centers each way		n/a
S12-GPRW3	3-27-13	12 “ centers each way		n/a
S12-GPRB1	3-27-13	(4) bars at bottom	Stirrups 36” to 48” oc	
S12-GPRB2	3-27-13	(4) bars at bottom	Stirrups 36” to 48” oc	
S12-GPRB3	3-27-13	(4) bars at bottom	Stirrups 36” to 48” oc	

Sheet S13 Locations

- Core/Steel Locations

Page	Location Type	PSI	
S13-SS1	steel sample	-	**See Compressive Strength Results Tables for Complete results**
S13-DC1	core deck	5940	
S13-DC2	core deck	6420	
S13-DW1	core wall	3510	

- GPR Scan Locations

Loc. ID	Date	Top spacing	bottom spacing	Thk.
S13-GPR1	3-27-13	10”-14” centers ea way	10”-14”n-s/ 3”-4”e-w	7”
S13-GPR2	3-27-13	10”-14” centers ea way	10”-14”n-s/ 3”-4”e-w	n/a
S13-GPR3	3-27-13	10”-14” centers ea way	10”-14”n-s/ 3”-4”e-w	n/a
S13-GPRB1	3-27-13	(4) bars at bottom	Stirrups 36” to 48” oc	
S13-GPRW1	3-27-13	12 “ centers each way		n/a

Sheet S14 Locations

- Core/Steel Locations

Page	Location Type	PSI	
S14-SS1	steel sample	-	**See Compressive Strength Results Tables for Complete results**
S14-DC1	core deck	7280	
S14-DC2	core deck	6470	

- GPR Scan Locations

Loc. ID	Date	Top spacing	bottom spacing	Thk.
S14-GPR1	3-27-13	-	10”-12” oc ea way	n/a
S14-GPR2	3-27-13	10”-14” centers ea way	10”-14”n-s/ 3”-4”e-w	n/a
S14-GPR3	3-27-13	4x4 welded wire mesh	6” centers ea way	n/a
S14-GPR4	3-27-13	4x4 welded wire mesh	12”-16” centers	n/a
S14-GPR5	3-27-13	10”-14” centers ea way	10”-14”n-s/ 3”-4”e-w	10”
S14-GPR6	3-27-13	10”-14” centers ea way	10”-14”n-s/ 3”-4”e-w	n/a