DRAFT

Oakland Bulk and Oversize Terminal

Oakland, Alameda County, California

TLS
TERMINAL LOGISTICS SOLUTIONS

BASIS OF DESIGN

Appendix

07/21/2015

CALIFORNIA CAPITAL & INVESTMENT GROUP

OAKLAND GLOBAL
PORT OF OAKLAND
CCIG OAKLAND GLOBAL LLC
CITY OF OAKLAND
"one vision, one team, one project"

HDR

OBOT
OAKLAND BULK AND OVERSIZED TERMINAL

ARCHITECTURAL DIMENSIONS

APPENDIX

TO

BASIS OF DESIGN

- BX-903 and BX-904 Environmental Enclosure
- BAM-1020 Operating Manual
- SASS & SuperSASS PM Ambient Chemical Samplers
- Dewatering Operations and Maintenance Manual

Model BX-903 and BX-904 Environmental Enclosure For BAM-1020 Operation Manual

BX-903-9800 Rev B

Met One Instruments, Inc.
1600 NW Washington Blvd.
Grants Pass, Oregon 97526
Telephone: 541-471-7111
Facsimile: 541-541-7116

Introduction:
The Environmental Enclosure Model BX-903 provides a small self-contained enclosure with internal environmental controls to maintain a constant temperature inside the enclosure. The unit is primarily designed for use with the BAM-1020 Particulate Monitor, with additional room available for other rack-mounted equipment. The unit contains an air conditioner as well as a set of heaters to maintain the temperature inside the enclosure. BX-904 is the same only with a larger A/C unit.

BX-903 Environmental Enclosure
Figure 1

Access doors are located on the back and front of the enclosure, providing easy access to the equipment contained in the enclosure. A weatherproof gland seal is located on the top of the enclosure for the inlet tube connection on the BAM-1020. See the BAM manual for complete setup instructions.

Note: The actual supplied enclosure may vary slightly from the photos shown here, due to normal variations in component supplies. Inspect your unit for the location of controls and mounting features if different than shown here.

Installation:
For installation, the BX-903 will require a source of 110-120 VAC Power at 30 amps (except 220V version). The BX-903 Enclosure is provided with an aluminum mounting base that should be anchored to a solid mounting base or concrete pad. The base has four ½” diameter mounting holes located on a bolt pattern that is approximately 19-1/2” x 35-5/8”.

Once the enclosure has been secured to the foundation, the instruments can be installed in the enclosure. Two mounting channels based on the RETMA 19” rack standard, are located inside the enclosure. The rails require 10-32 mounting screws for securing the BAM-1020 inside the enclosure. A bag of screws has been provided for installation of equipment onto the rack rails.

BX-903 Front View
Figure 2

When installing the BAM-1020, be sure that the unit is installed in the correct hole pattern on the support rails. Care should be taken to make sure that the BAM is level in the rack rails, or the inlet tube will not fit properly. Most BAMs will be installed at the **lowest position in the rack**, just above the shelf. This will result in a PM10 inlet height of about two meters, and will allow space above the BAM for the BX-827/830 Smart Inlet Heater (if supplied).

In some cases, the BAM may be installed higher in the rack to allow other rack equipment to be installed underneath (without BX-827 heater as shown in Figure 2), but adequate space above the BAM must be maintained for inlet tube access.

Once the BAM-1020 has been secured in the rack rails, the pipe seal parts for the inlet tube can be installed in the threaded fitting at the top of the enclosure (Figure 3). It is recommended that a silicone-sealing compound or Teflon tape be used to seal the threads of the gland as they enter

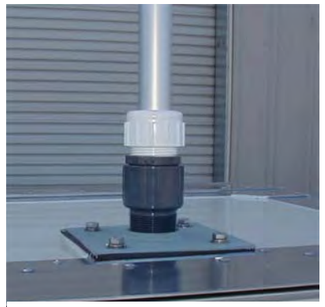

Sealing Gland Assembly
Figure 3

the threaded plate. The gland should be hand tightened, and if a pipe wrench is used, a protective layer of material or a rag should be used to prevent damage to the gland. **Do Not Over Tighten!**

Once the gland has been installed, remove the white top threaded section and the barrel-shaped rubber seal. Insert the short inlet tube through the top of the gland and into the BAM-1020. Wet the rubber seal with water to lubricate it and make sliding the rubber seal down over the top of the inlet tube easier. Slide the seal down and into the sealing gland, then slip the white thread ring over the top of the inlet tube and secure it on the top of the sealing gland.

A space is provided under the main area of the enclosure for installation of the vacuum pump unit. It will normally not move around during operation, and can just be set in the base of the enclosure as shown in Figure #4. The AC power electrical connections from the pump and the BAM-1020 can be connected to the power strip located in the backside of the enclosure. The electrical connections can be seen in Figure #5 as shown in the rear view of the enclosure. Pump control cable and air hose connections from the BAM to the pump are installed per the BAM-1020 manual.

Location of Pump in Enclosure
Figure 4

Rear View of Enclosure
Figure 5

At the front of the enclosure, and located on the left hand side of the inner wall is the power control circuit breaker. It provides AC power protection and as a power control switch for turning off the power to the equipment in the enclosure as well as the heater and the air conditioning unit. See Figure #6. A switch is also provided on the plug strip at the inside back wall of the enclosure.

Located directly behind the circuit breaker enclosure is the thermostat control for the heater unit. It has been factory set to maintain a constant temperature inside the enclosure and should not require any adjustment. If it becomes necessary to adjust the thermostat, be careful that the heater unit and the air conditioner do not conflict with each other causing rapid cycling between heating and cooling of the enclosure.

Caution: A protective grill is used to cover the heater elements located in the enclosure. This area can get very hot while the heater is on and should be avoided. Keep the pump and any other materials that might be damaged from heat, away from this area.

Circuit Breaker Panel
Figure 6

Ground Lug Location
Figure 7

For lightning protection and electrical noise protection, a ground lug has been provided at the base of the enclosure and is located below the air conditioning unit. A copper ground wire of 00 size should be connected from the terminal block to a ground rod installed next to the BX-903 Enclosure. The ground lug can be seen in Figure #7.

Maintenance:
The BX-903 requires minimum maintenance other than periodic removal and cleaning of the air conditioner filter. The filter can be removed from the air conditioner and cleaned. When first installed, this filter should be checked at least each month to determine how often it will need to be cleaned. Review the Air Conditioner manufacturers manual for additional information.

The vents inside the enclosure should also be inspected to make sure that there is not any dust collecting that might prevent proper cooling of the air conditioner.

The outside of the enclosure can be cleaned by washing it down with a low-pressure water hose, sponge and soapy water. If the water pressure is too high, it is possible to break the door seal and cause leakage inside the enclosure.

The door latch assembly and door seals should be regularly inspected and tightened when necessary to prevent entry of water from rainstorms.

BX-903 Dimensions and Views

Actual dimensions and accessories may vary slightly from those shown.

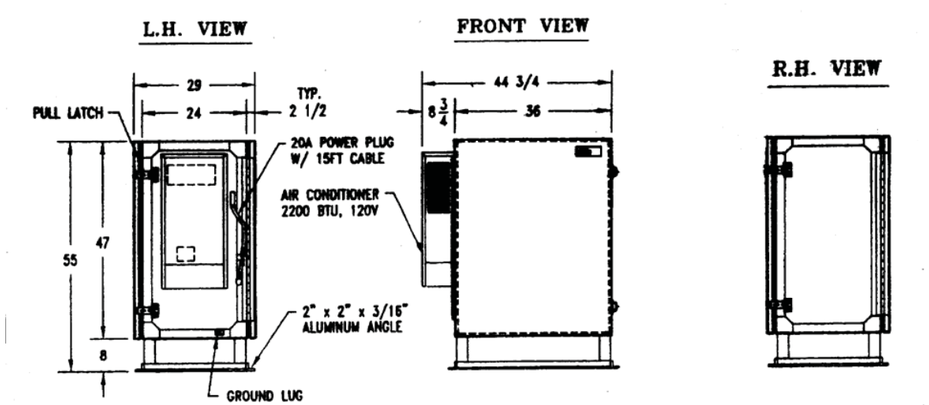

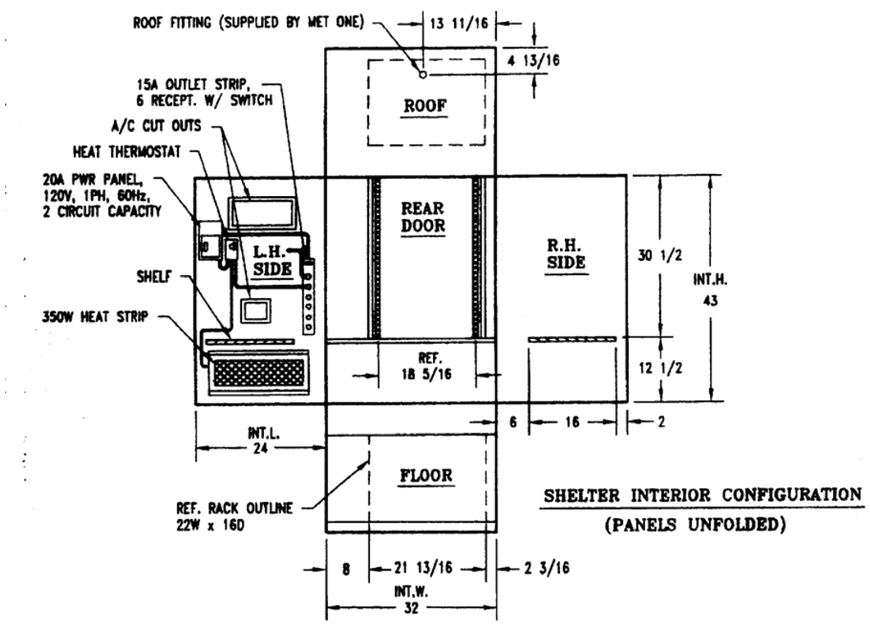

SHELTER INTERIOR CONFIGURATION
(PANELS UNFOLDED)

BAM 1020
PARTICULATE MONITOR
OPERATION MANUAL

BAM-1020-9800 REV K

Met One Instruments, Inc.
1600 NW Washington Blvd.
Grants Pass, OR 97526
Telephone: (541) 471-7111
Facsimile: (541) 471-7116
www.metone.com

BAM-1020 Particulate Monitor Operation Manual - © Copyright 2008 Met One Instruments, Inc. All Rights Reserved worldwide. No part of this publication may be reproduced, transmitted, transcribed, stored in a retrieval system, or translated into any other language in any form without the express written permission of Met One Instruments, Inc.

Table of Contents

1 INTRODUCTION 4
1.1 About This Manual ... 4
1.2 Technical Service ... 4
1.3 BAM: Beta Attenuation Monitor ... 5
1.4 Beta Radiation Safety Statement ... 5
1.5 Model BAM-1020 PM_{10} U.S. EPA Equivalent Method ... 6
1.6 Model BAM-1020 $PM_{2.5}$ U.S. EPA Equivalent Method ... 7
1.7 Model BAM-1020 $PM_{10-2.5}$ U.S. EPA Equivalent Method ... 8
1.8 BAM-1020 Specifications ... 9
2 SITE SELECTION AND INSTALLATION 10
2.1 Unpacking, Inspection, and Evaluation Testing ... 10
2.2 Enclosure Selection and Temperature Control ... 10
2.3 Site Selection and Inlet Positioning Criteria ... 11
2.4 Mounting Options in a Walk-In Shelter ... 13
2.5 BAM-1020 Installation Instructions ... 13
2.6 BAM-1020 Power and Electrical Service ... 22
3 INITIAL SETUP OF YOUR BAM-1020 23
3.1 Power Up ... 23
3.2 Warm-up Period ... 23
3.3 The Main Menu and Using the Keypad and Display ... 23
3.4 Filter Tape Loading ... 25
3.5 Self-Test ... 26
3.6 Initial SETUP Settings Considerations ... 27
3.7 Initial Leak Check and Flow Check ... 28
3.8 Starting a Measurement Cycle ... 28
3.9 Accessing the Flow Statistics Screen ... 28
3.10 The OPERATE Menus ... 29
3.11 The NORMAL Operation Screen ... 29
3.12 The INSTANTANEOUS and AVERAGE Operation Screens ... 30
4 THE MEASUREMENT CYCLE 31
4.1 The One-Hour Cycle Timeline ... 31
4.2 Automatic Span Checks During The Cycle ... 32
4.3 Sample Period Description ... 33
5 FLOW SYSTEM and FLOW CALIBRATIONS 34
5.1 Flow System Diagram ... 34
5.2 Flow Control Types – Standard or Actual Flow ... 35
5.3 About Leak Checks, Nozzle Cleaning, and Flow Checks ... 36
5.4 Leak Check Procedure ... 36
5.5 Nozzle and Vane Cleaning Procedure ... 38
5.6 Field Calibration of the Flow System – Actual Flow Mode ... 40
5.7 Field Calibration of the Flow System – Standard Flow Mode ... 42
5.8 Field Calibration of the Flow System – Manual Flow Valve ... 42
6 SETUP MENU DESCRIPTIONS 43
6.1 CLOCK Setup Screen ... 44
6.2 SAMPLE Setup Screen – Range, Sample, and Timing Settings ... 44
6.3 CALIBRATE Setup Screen – Critical Flow and Calibration Settings ... 47
6.4 EXTRA1 Setup Screen ... 49

6.5 ERRORS Setup Screen for the Analog Output ... 50
6.6 PASSWORD Setup Screen ... 51
6.7 INTERFACE Setup Screen ... 51
6.8 SENSOR Setup Screen for External Met Sensors ... 52
6.9 HEATER Setup Screen – RH Control Settings ... 53
6.10 QUERY Setup Screen – Custom Data Array Setup ... 55
6.11 REPORTS Setup Screen – Daily Data Range ... 56
7 MAINTENANCE, DIAGNOSTICS and TROUBLESHOOTING 57
7.1 Met One Recommended Periodic Maintenance Table ... 57
7.2 BAM-1020 Error and Alarm Descriptions ... 58
7.3 Correlating BAM-1020 Data to FRM Sampler Data ... 61
7.4 Power Up Problems and Electrical Safety Considerations ... 62
7.5 Basic Problem and Cause/Solution Table ... 64
7.6 Nozzle Component Service and O-ring Replacement ... 66
7.7 Performing the 72-Hour Zero Filter Background Test ... 68
7.8 The TEST Menu System – Overview ... 70
7.9 COUNT Test Menu – Beta Detector Count Tests ... 70
7.10 PUMP Test Menu – Manual Pump and Nozzle Tests ... 70
7.11 TAPE Test Menu – Manual Filter Forward/Backward Tests ... 71
7.12 DAC Test Menu – Analog Output Test ... 71
7.13 CALIBRATE Test Menu – Span Membrane Mass Tests ... 72
7.14 INTERFACE Test Menu – Relay I/O Channel Tests ... 72
7.15 FLOW Test Menu ... 73
7.16 ALIGN Test Menu – Tape Transport Motor and Photosensor Tests ... 73
7.17 HEATER Test Menu ... 74
7.18 FILTER-T Test Menu – Filter Temperature Sensor Tests ... 74
7.19 RH Test Menu – Filter Humidity Sensor Test and Calibration ... 75
8 EXTERNAL DATALOGGER INTERFACE SYSTEM 76
8.1 Analog Concentration Output Signal ... 76
8.2 Early Cycle Mode Option For Analog Data Collection ... 77
8.3 Telemetry and Error Relays ... 78
8.4 Interfacing a Digital Datalogger with the BAM-1020 ... 81
9 DIGITAL COMMUNICATIONS AND DATA RETRIEVAL 82
9.1 Direct Serial Port Connections and Settings ... 82
9.2 Using Met One Comet Communications Software ... 83
9.3 Downloading Data Using Simple Terminal Programs ... 84
9.4 System Menu and File Descriptions Using a Terminal Program ... 85
9.5 Printer Output Port Functions ... 91
9.6 Modem Option ... 92
9.7 BAM-1020 Firmware Upgrades ... 92
9.8 Resetting the Data Pointer for New Data Collection ... 95
9.9 Data Collection Using the Query Output or Bayern-Hessen Protocol ... 95
10 ACCESSORIES and PARTS 98
10.1 Consumables, Replacement Parts, and Accessories ... 98
10.2 BX-500 Series Meteorological Sensor Configurations ... 103
11 THEORY OF OPERATION and MATHEMATICAL ANALYSIS 105
11.1 Converting Data Between EPA Standard and Actual Conditions ... 107

1 INTRODUCTION

1.1 About This Manual

This document is organized with the most important information toward the front of the manual, such as site selection, installation, setups, and field calibrations.

Toward the back are sections that provide in-depth information on subjects such as theory, diagnostics, accessories, and alternate settings. These sections provide valuable information which should be consulted as needed. Electronic versions of this manual are also available.

This manual is periodically revised for maximum accuracy, and to incorporate new features or updates. Below is a brief description of the BAM-1020 manual revision history:

Rev	Released	Manual Description
A-E	1998-2006	Obsolete revisions of the manual. These are only suitable for older BAM-1020 units with firmware Rev 2.58 or earlier. Users of these units should acquire a newer manual revision.
F	March 2007	Complete re-write of the entire manual to accompany the EPA PM2.5 FEM candidate modifications for the BAM-1020. Extensively corrected, reorganized, and updated all sections. Applies to all BAM-1020 units of all vintages. All BAM-1020 units using revision 3.0 or later firmware must have a Rev F or later manual.
G	May 2008	Minor revisions for the official sales release of the EPA designated PM2.5 FEM version of the BAM-1020. Added final PM2.5 designation requirements and installation drawings. Other minor revisions throughout the manual. Applies to all BAM-1020 units. All BAM-1020 units using revision 3.2.5 or later firmware should have a Rev G or later manual.
H	June 2010	Revisions to incorporate information about the PM-Coarse designated version, and to add information about new firmware features up to firmware rev 3.6. Additional maintenance procedures added.
J	Sep 2011	Minor revisions to zero filter test instructions.
K	Oct 2012	Added electrical safety requirements and smart heater configurations in section 2. Added report processor and firmware compatibility details. Firmware features up to version 3.7.

1.2 Technical Service

This manual is structured by customer feedback to provide the required information for setup, operation, testing, maintaining, and troubleshooting your BAM-1020 unit. Should you still require support after consulting your printed documentation, we encourage you to contact one of our expert Technical Service representatives during normal business hours of 7:00 a.m. to 4:00 p.m. Pacific Standard Time, Monday through Friday. In addition, technical information and service bulletins are often posted on our website. Please contact us and obtain a Return Authorization (RA) number before sending any equipment back to the factory. This allows us to track and schedule service work and to expedite customer service.

Phone: **(541) 471-7111** Fax: (541) 471-7116
E-Mail: service@metone.com Web: www.metone.com
Address: Technical Services Department
Met One Instruments, Inc.
1600 NW Washington Blvd.
Grants Pass, OR 97526

All BAM-1020 units have a serial number on the label on the back panel, embossed on the two metal NRC tags, and printed on the calibration certificate. This number is needed if you contact the technical service department to request information about repairs or updates for your unit. The serial number begins with a letter which represents the year of manufacture, followed by a unique four or five digit number. Example: F8029 was built in 2006.

Letter	Year
W	1998
X	1999
Y	2000
A	2001
B	2002
C	2003
D	2004
E	2005
F	2006
G	2007

Letter	Year
H	2008
J	2009
K	2010
M	2011
N	2012
P	2013
R	2014
T	2015
U	2016
W	2017

1.3 BAM: Beta Attenuation Monitor

The Met One Instruments model BAM-1020 automatically measures and records airborne particulate concentration levels using the principle of beta ray attenuation. This method provides a simple determination of concentration in units of milligrams or micrograms of particulate per cubic meter of air. A small C-14 (Carbon 14) element emits a constant source of high-energy electrons known as beta particles. These beta particles are detected and counted by a sensitive scintillation detector. An external pump pulls a measured amount of dust-laden air through a filter tape. After the filter tape is loaded with ambient dust, it is automatically placed between the source and the detector thereby causing an attenuation of the beta particle signal. The degree of attenuation of the beta particle signal is used to determine the mass concentration of particulate matter on the filter tape, and hence the volumetric concentration of particulate matter in ambient air. A complete description of the measurement cycle is included in Section 4. In addition, a scientific explanation of the theory of operation and the related equations is included at the back of the manual.

1.4 Beta Radiation Safety Statement

The Met One Instruments BAM-1020 contains a small C-14 (Carbon 14) beta radiation-emitting source. The activity of the source is **60 µCi** ±15µCi (microcurries), which is below the "Exempt Concentration Limit" of 100 µCi as defined in 10 CFR Section 30.71 – Schedule B. The owner of a BAM-1020 is not required to obtain any license in the United States to own or operate the unit. The owner of a BAM-1020 may elect to return the entire unit to Met One Instruments for recycling of the C-14 source when the unit has reached the end of its service life, although the owner is under no obligation to do so. Under no circumstances should anyone but factory technicians attempt to remove or access the beta source. The beta source has a half-life of about 5730 years, and should never need to be replaced. Neither the C-14 source nor the beta particle detector are serviceable in the field. Should these components require repair or replacement, the BAM-1020 must be returned to the factory for service and recalibration.

1.5 Model BAM-1020 PM_{10} U.S. EPA Equivalent Method

The Met One Instruments, Inc. Model BAM-1020 is designated as an equivalent method for PM_{10} monitoring by the United States Environmental Protection Agency as of August 3, 1998.

Designation Number: **EQPM-0798-122**

The EPA designation applies to G, -1, G-1, and later BAM-1020 PM_{10} Beta Attenuation Monitors, when used in conjunction with the following requirements. Users are advised that configurations that deviate from this specific description may not meet the applicable requirements of 40 CFR Parts 50 and 53:

- The BAM-1020 is operated to obtain a daily average of the hourly measurements, with a filter change frequency of one hour.
- The inlet must be equipped with the standard BX-802 EPA PM_{10} Size-Selective Inlet.
- The unit must be used with standard glass fiber filter tape.
- The unit may be operated with or without any of the following options: BX-823 inlet tube extension, BX-825 heater kit, BX-826 230V heater kit, BX-828 roof tripod, BX-902 exterior enclosure, BX-903 exterior enclosure with temperature control, BX-961 mass flow controller, BX-967 internal span membrane system.

Updates – Using newer BAM-1020 units and newer firmware for PM_{10}

- The $PM_{2.5}$ FEM BAM-1020 configuration maintains the existing PM_{10} designation. To use a PM2.5 FEM BAM-1020 for PM10, simply remove the VSCC cyclone and set the CONC TYPE to STD. See Section 6.3.
- BAM-1020 units configured for PM_{10} sampling may use the BX-827 or BX-830 Smart Inlet Heaters for humidity control of 35 to 45%, no delta-T control.
- The BKGD (background) zero correction for PM_{10} BAM-1020 units may be determined in the field using the BX-302 zero filter kit if desired, although it is not a requirement.
- It is no longer required that the BAM-1020 only be operated with a 50 minute sample time and 4 minute count times for PM_{10} sampling. The 42 minute sample time and 8 minute count times used for the $PM_{2.5}$ FEM configuration may be used for PM_{10} sampling as well. See Section 6.2.
- PM_{10} data is usually reported in EPA standard conditions. Newer BAM-1020 units (firmware 3.0 and later) have a CONC TYPE setting which must be set to STD, and a FLOW TYPE setting which should be set to ACTUAL for PM_{10} sampling. This will cause the BAM to regulate the flow to actual conditions for a proper inlet cut-point, but store the concentration and flow volume based on standard conditions for reporting purposes. Older BAM-1020 units (firmware 2.58 and earlier) only had a FLOW TYPE setting, which must be set to STD for PM_{10} monitoring. See Sections 5.2 and 6.3.
- PM_{10} units may use either the BX-592 or the BX-596 ambient temperature sensor.

1.6 Model BAM-1020 $PM_{2.5}$ U.S. EPA Equivalent Method

The Met One Instruments, Inc. Model BAM-1020 Beta Attenuation Mass Monitor - $PM_{2.5}$ FEM Configuration, is designated as an equivalent method for $PM_{2.5}$ monitoring in accordance with 40 CFR Part 53 by the United States Environmental Protection Agency as of March 12, 2008.

Designation Number: **EQPM-0308-170**

All of the following parameters and conditions must be observed when the BAM-1020 is operated as an EPA designated $PM_{2.5}$ FEM particulate monitor:

- The inlet must be equipped with an EPA-designated $PM_{2.5}$ Very Sharp Cut Cyclone (VSCC™-A by BGI, Inc.). The Met One stock number for the VSCC™ is BX-808.
- The inlet must also be equipped with a standard EPA PM_{10} Size-Selective Inlet head. Met One model BX-802.
- The unit is operated for hourly average measurements. The $PM_{2.5}$ concentration is calculated (external to the BAM) as a daily average of the hourly concentration measurements made by the BAM-1020.
- The unit must be equipped with firmware revision 3.2.4 or later.
- The BAM-1020 must be operated in proper accordance with this operation manual, revision F or later. A supplemental BGI Inc. manual is also supplied with the VSCC™.
- The unit must be equipped with a BX-596 ambient temperature and barometric pressure combination sensor. This is used for flow control and flow statistics.
- The unit must be equipped with the internal BX-961 automatic flow controller, and must be operated in Actual (volumetric) flow control and flow reporting mode.
- The unit must be equipped with a BX-827 (110V) or BX-830 (230V) Smart Inlet Heater, with the heater RH regulation setpoint set to 35%, and Delta-T control disabled.
- The unit must be equipped with the 8470-1 rev D or later tape control transport assembly with close geometry beta source configuration. All BAM-1020 units manufactured after March 2007 have these features standard. Older units will have to be factory upgraded and re-calibrated to the latest specifications.
- The unit must be operated with standard glass fiber filter tape.
- The COUNT TIME parameter must be set for 8 minutes, and the SAMPLE TIME parameter must be set for 42 minutes.
- The BX-302 zero filter calibration kit is a required accessory. This kit must be used to audit the BKGD (background) value upon unit deployment and periodically thereafter, as described in this manual and the separate BX-302 manual.
- The unit may be operated with or without a BX-823 eight foot inlet tube extension and with or without weatherproof outdoor enclosures BX-902 or BX-903.

Non-EPA Designated $PM_{2.5}$ Configurations:

Some other countries do not require the full U.S. EPA FEM criteria for their $PM_{2.5}$ continuous monitoring networks. These BAM-1020 units may be supplied with a model BX-807 $PM_{2.5}$ Sharp-Cut Cyclone instead of the more expensive VSCC cyclone. In addition, the simpler BX-592 temperature sensor may be used, the BX-302 zero filter may be omitted, and the firmware may not be capable of performing 8 minute counts. *These compromises may come at the expense of less optimal accuracy*. Met One cannot guarantee the $PM_{2.5}$ FEM accuracy specifications if the BAM-1020 is used with downgraded accessories and firmware.

1.7 Model BAM-1020 $PM_{10-2.5}$ U.S. EPA Equivalent Method

The Met One Instruments, Inc. Model BAM-1020 $PM_{10-2.5}$ Measurement System is designated as an equivalent method for $PM_{10-2.5}$ (PM-Coarse) monitoring in accordance with 40 CFR Part 53 by the United States Environmental Protection Agency as of June 15, 2009

Designation Number : **EQPM-0709-185**

The following conditions must be observed when a pair of BAM-1020 units are operated as a $PM_{10-2.5}$ FEM continuous measurement system:

- One of the BAM-1020 units is configured as a $PM_{2.5}$ FEM (EQPM-0308-170).
- The other unit is configurable as a $PM_{2.5}$ FEM, but set to measure PM_{10} by excluding the $PM_{2.5}$ cyclone.
- The two monitors are collocated within 1 and 4 meters apart at the inlet.
- The units are equipped with the BX-COARSE sampling kit, which allows the two units to be directly connected together to provide concurrent sampling and reporting of the $PM_{10-2.5}$ concentrations.
- Both units are operated in accordance with the PM-Coarse manual addendum (document BX-COARSE-9800), revision 5-5 or later. The revision A and later manual supersedes all beta release revisions 5-5 and earlier.

The $PM_{10-2.5}$ BAM-1020 units use different firmware which contains extra setup menus and extra data array parameters for the coarse measurement. The system reports U.S. EPA FEM designated measurements for PM_{10}, $PM_{2.5}$, and $PM_{10-2.5}$ all in a single data array. The data must be collected digitally from the master BAM-1020 in the system. See the BX-COARSE manual addendum for details about the system.

1.8 BAM-1020 Specifications

PARAMETER	SPECIFICATION
Measurement Principle:	Particulate Concentration by Beta Attenuation.
U.S. EPA Designations:	EPA Class III PM_{10} FEM: EQPM-0798-122 EPA Class III $PM_{2.5}$ FEM: EQPM-0308-170 EPA Class III $PM_{10-2.5}$ FEM: EQPM-0709-185
Standard Range:	0 - 1.000 mg/m^3 (0 - 1000 µg/m^3)
Optional Ranges:	0 - 0.100, 0.200, 0.250, 0.500, 2.000, 5.000, 10.000 mg/m^3 (special applications)
Accuracy:	Exceeds US-EPA Class III $PM_{2.5}$ FEM standards for additive and multiplicative bias.
Measurement Resolution:	0.24 µg/m^3 (1.000 mg range). 2.4 µg/m^3 (10 mg range).
Data Resolution:	1 µg/m^3 (Concentration data stored and displayed in whole micrograms).
Sensitivity Std. Deviation: (σ) (1 hour)	Less than 2.4 µg/m^3 (less than 2.0 µg/m^3 typical). Auditable with zero filter test.
Lower Detection Limit: (2σ) (1 hour)	Less than 4.8 µg/m^3 from 0.000 to 0.100 mg/m^3 (less than 4.0 µg/m^3 typical). Auditable with zero filter test.
Lower Detection Limit: (2σ) (24 hour)	Less than 1.0 µg/m^3. Auditable with zero filter test.
Measurement Cycle Time:	1 Hour
Flow Rate:	16.7 liters/minute. Adjustable 0-20 LPM range. Actual or Standard flow.
Filter Tape:	Continuous glass fiber filter, 30mm x 21m roll. > 60 days/roll.
Span Check:	Automatic 800ug (typical) span foil verified hourly. Manually auditable.
Beta Source:	C-14 (carbon-14), 60 µCi ±15 µCi (< 2.22 X 10^6 Beq), Half-Life 5730 years.
Beta Detector Type:	Photomultiplier tube with organic plastic scintillator.
Operating Temp. Range:	0° to +50°C. Shelter temperature should be stable to within ±2°C per hour.
Ambient Temp. Range:	-40° to +55°C standard. Optional -50 degree temperature sensors available.
Ambient Humidity Range:	0 to 90% RH, non-condensing.
Humidity Control:	Actively controlled inlet heater module, 10% - 99% RH setpoint (35% standard).
Approvals:	U.S. EPA, MCERTS, CE, NRC, TUV, CARB, ISO-9001.
Standard User Interface:	Menu-driven interface with 8x40 character LCD display and dynamic keypad.
Optional User Interface:	Graphic color touch screen display module, Model BX-970.
Analog Output:	Isolated 0-1 VDC output standard. 0-10V, 4-20mA, 0-16mA switch-selectable.
Serial Interface:	RS-232 2-way serial ports for PC or modem communications.
Printer Output:	Output-only serial port, data or diagnostic output to a PC or serial printer.
Telemetry Inputs:	Clock Reset (voltage or contact closure), Telemeter Fault (contact closure).
Alarm Contact Closures:	Data Error, Tape Fault, Flow Error, Power Failure, Maintenance.
Compatible Software:	Air Plus™, Comet™, MicroMet Plus®, HyperTerminal®, ProComm Plus®.
Error Reporting:	User-configurable. Available through serial port, display, and relay outputs.
Memory:	4369 records (182 days @ 1 record/hr). Extended memory Report Processor option
Power Supply:	100 - 230 VAC, 50/60 Hz. 0.4 kW, 3.4A max @110V. Not including shelter.
Weight:	24.5 kg (54 lbs) without external accessories.
Unit Dimensions:	H x W x D = 31cm x 43cm x 40cm (12.25" x 17" x 16").

Specifications may be subject to change without notice.

2 SITE SELECTION AND INSTALLATION

2.1 Unpacking, Inspection, and Evaluation Testing

If any damage to the shipment is noticed before unpacking, **a claim must be filed with the commercial carrier immediately**. Notify Met One Instruments after notification of the commercial carrier.

Unpack the unit and accessories and compare them to the packing list to make sure you have all of the required items for the type of installation you plan to perform. A separate quick setup guide with color photos of most of the common accessories should be included with the this manual. You can use the quick setup guide to fully configure and operate the BAM-1020 unit on a test bench if desired.

The BAM-1020 is shipped with one or two white foam rings and a white plastic shim inside the front of the unit, which prevent the moving parts of the tape control assembly from being damaged in transit. The rings and shim must be replaced anytime the unit is being transported in order to avoid damaging the tape control mechanism. Do not ship or transport the BAM-1020 with filter tape installed. Please keep the special shipping box and foam packing material which the unit came in. They should be re-used if you must return the unit to the factory for any reason. Met One is not responsible for damage to the unit if returned in non-original packaging, or without the foam rings in place. Contact Met One for replacement packing materials if necessary.

2.2 Enclosure Selection and Temperature Control

The BAM-1020 unit is not weatherproof. It is designed to be mounted in a weatherproof, level, low vibration, dust free, and temperature-stable environment where the operating temperature is between 0° C and +50° C, and where the relative humidity is non-condensing and does not exceed 90%. There are two standard configurations described below for providing a weatherproof location in which to install the unit. Please contact Met One for advice if you plan to have a non-standard mounting or enclosure configuration.

1. **A walk-in shelter or building:** These are usually semi-portable pre-fabricated shelters or portable trailers with a flat roof, or a room in a permanent building or structure. The BAM is mounted on a workbench or in an equipment rack, often with a variety of other instruments installed in the same shelter. The inlet tube of the BAM must extend up through a hole in the roof of the structure with appropriate sealing hardware. AC power must be available. Instructions for this type of installation are included in this section of this manual.
2. **BX-902/903/906 mini weatherproof enclosures:** Sometimes nicknamed "dog house" enclosures, these small pre-fabricated enclosure are just big enough for the BAM and related accessories, and are installed on the ground or on the roof of a larger building. They are available with a heater (BX-902), or with a heater and air conditioner (BX-903). A dual-unit air conditioned mini shelter is also available (BX-906). These enclosures are all specified by Met One to accept the BAM-1020, and are supplied with a supplemental installation manual.

Shelter Temperature Control Notes: The air temperature inside a BAM shelter or enclosure is not required to be regulated to any specific narrow range or setpoint (such as 25C), subject to the following caveats:

1. The shelter temperature must stay between 0 and 50C inside at all times or BAM alarms and failures may result. Remember that the BAM vacuum pump and inlet heater can contribute significantly to shelter heating.
2. The exact shelter temperature within the 0-50 degree range is not critical *as long as it fluctuates as little as possible during the course of any single sample hour*. This is important because the unit measures the beta particles through a small gap of air around the filter tape at the beginning and the end of each hour. Air density changes with temperature, so if the air temperature inside the enclosure changes rapidly by more than a couple of degrees per hour, the hourly concentration measurements can be noisier than usual by several micrograms.
3. Met One recommends logging the temperature inside non-air conditioned mini enclosures such as the model BX-902. The lower cost of these shelters comes at the expense of less effective temperature regulation. Met One can supply a BX-592-1 room temperature sensor which can be logged directly by the BAM-1020.
4. BAM users in hot climates where the ambient temperature exceeds 40C should consider using the model BX-903 air conditioned mini shelter or an air conditioned walk-in shelter to avoid over-heating the BAM-1020.
5. Air conditioned shelters in areas with very hot and humid air should not be set at too low of a setpoint, or condensation inside the BAM may occur. The solution is to set the shelter thermostat a little higher.

2.3 Site Selection and Inlet Positioning Criteria

Selection of a proper site for the BAM-1020 is critical for accurate measurements. These items must be correctly addressed in order for the collected data to be acceptable for regulatory requirements, such as EPA PM_{10} and $PM_{2.5}$ equivalent data reporting.

Specifications for site selection and inlet positioning generally match those for FRM samplers, and can be found in United States regulation **40 CFR, Part 58, Appendix D and E**. There are also a variety of EPA guidance documents and quality assurance documents which describe site criteria in detail. In any case, the Code of Federal Regulations takes precedence. Site selection and inlet position criteria may vary in other countries.

Inlet Height Criteria:

- The BAM-1020 total inlet height must be located in the “breathing zone”, between 2 and 15 meters above ground level for neighborhood scale sites. Middle scale or microscale sites require a total inlet height of between 2 and 7 meters.
- If the unit is to be installed in an enclosure on ground level, then the inlet height must be at least two meters above the ground. The BX-902/903 mini shelters have a short inlet tube to locate the inlet two meters above whatever surface they are placed on.
- If the unit is located on (or through) the roof of a building, the inlet height must be no less than two meters above roof surface of the building. This matches the inlet height of most FRM samplers. The total height must still be no more than 15 meters above ground level.

- If the BAM-1020 is to be collocated with other particulate instruments, such as FRM filter samplers or other BAM units, then the air inlets must all be the same height within one meter vertically. Met One recommends a tighter tolerance of within 30cm (1 foot).
- Met One supplies a single 8 foot (2.5m) inlet tube unless otherwise specified. Shorter custom inlet tubes of any length are available. Two inlet tubes may also be coupled together for a maximum of 16 feet (5m). Account for the height of the PM_{10} and/or $PM_{2.5}$ heads when planning the required inlet tube length.
- If the BAM-1020 inlet is the highest metallic point on a building, then a lightning rod must be installed to prevent destruction of the BAM during electrical storms.

Inlet Spacing and Clearance Criteria:

- If the BAM-1020 is to be collocated with another instrument, such as an FRM sampler, then the inlets must be spaced between one and four meters apart. Two meter spacing is recommended where possible.
- If installed near a PM_{10} high-volume sampler, then the distance between the inlet of the BAM-1020 and the Hi-Vol should be no less than three meters.
- The BAM-1020 inlet must be unobstructed for two meters in all directions from any object that may influence airflow characteristics, such as walls, parapets, or structures on a rooftop.
- If located beside a major obstruction (such as a building), then the distance between the inlet and the building should be equal to twice the height of the building.
- There must be at least a 180 degree arc of completely unrestricted airflow around the inlet. The predominant wind direction during the highest concentration season must be included in the 180 degree arc.
- The inlet must be at least 10 meters from the drip line of any trees.

Particulate Sources: To avoid possible errors in the concentration measurements, the inlet must be located as far as possible from any artificial sources of particulate, such as blowers, vents, or air conditioners on a rooftop. Especially if any of these types of devices blow air across the inlet of the BAM-1020. Even sources of filtered air must not blow across the inlet.

Spacing from Roadways: Except for microscale studies, the BAM-1020 should usually not be located directly next to a major highway or arterial roadway, as vehicle exhaust will dominate the concentration measurement. Criteria for roadway spacing of particulate monitors can be complicated. See 40 CFR Part 58 - Appendix E, section 6.3 (July 2009).

- For general neighborhood scale monitoring, the BAM-1020 should be at least 10 meters away from a road with a daily traffic volume of less than 1,000 vehicles, at least 30 meters from a road with a volume of 20,000 vehicles, at least 100 meters from a road with a volume of 70,000 vehicles, and at least 250 meters from a road with a volume of greater than 110,000 vehicles.
- The unit should be located as far as possible from unpaved roadways, as these also cause artificial measurements from fugitive dust.
- The unit should not be installed in unpaved areas unless year-round vegetative ground cover is present, to avoid the effects of re-entrained fugitive dust.

2.4 Mounting Options in a Walk-In Shelter

When the BAM-1020 is to be located in a walk-in shelter, the unit will have to be installed either in an equipment rack or on a bench-top. Met One recommends using an equipment rack when possible, because it does a better job of keeping the unit in the correct placement and allows vertical adjustments. A rack also tends to be a cleaner installation. However, either method may be used as long as the mounting is level and allows the inlet tube to be perfectly vertical. Standard rack-mount screws are supplied with each unit. Take the following into account when planning the mounting:

- **Rear Access:** It is important that you leave plenty of access to the rear of the BAM-1020 unit for wiring connections and maintenance. At least five inches is required. Full access to the back is recommended whenever possible. There must be adequate access to the power switch located on the back of the instrument.
- **Top Access:** It is necessary to have a minimum of eight inches clearance between the top of the BAM inlet receiver and the bottom of the shelter ceiling to accommodate the smart inlet heater which mounts on the inlet tube directly above the BAM.
- **Mobile Shelters:** If the BAM-1020 is being installed into an equipment rack in a mobile trailer or van, then additional care should be taken to ensure that the mounting can handle the additional strain. The foam shipping rings must also be inserted any time a mobile shelter is moved with the BAM-1020 inside.
- **Rack Modifications:** It is usually necessary to modify the top plate of the equipment rack by cutting a 2 inch diameter (75mm) hole to allow the inlet tube to extend through to the ceiling. The BAM dimensional drawings below show the location of the inlet. *Note:* The inlet heater installs onto the inlet tube two inches above the top of the inlet receiver of the BAM-1020. If the BAM unit is to be mounted in a rack, it will be necessary to leave extra room above the BAM in the rack for the heater, or to make the hole in the top of the rack larger in order to clear the heater diameter. The heater is supplied with a foam insulation sleeve which may be modified as needed. Make sure these parts are going to fit before installing the BAM-1020.

2.5 BAM-1020 Installation Instructions

Installation of the BAM-1020 should be performed by personnel familiar with environmental monitoring equipment. There are no special precautions or handling concerns except for the normal level of care required for handling scientific equipment. Refer to the diagrams on the following pages.

1. **Roof Modifications:** Determine the exact location where the BAM inlet tube will pass through the roof of the shelter, and drill a 2 ¼" or 2 ½" (60mm) diameter hole through the roof at that location. Make sure the hole is directly above where the BAM inlet receiver is to be located, so the inlet tube will be perfectly vertical. A plumb weight is useful for determining where to locate the hole. Note that the inlet receiver on the BAM is slightly off-center! BX-902/903 mini shelters do not require any roof drilling.
2. **Waterproof Roof Flange:** Apply all-weather silicone caulking around the top of the hole, and install the BX-801 roof flange onto the hole. The threaded barrel of the flange is usually installed downward. Secure the flange in place with four lag bolts or

self-tapping screws (not supplied). Caulk around the screws to prevent leaks. Apply Teflon tape to the threads of the gray plastic watertight fitting, and screw it into the roof flange tightly. BX-902/903 mini shelters come with a roof flange installed, and only need the watertight fitting. **Note:** Some BAM users prefer to fabricate their own roof flange instead of using the one supplied by Met One, due to factors such as high snow loading or a sloped roof. This is fine as long as no leaks occur. Damage from a leaking roof is usually not covered under warranty.

3. **Inlet Tube Installation and Alignment:** Remove the white threaded cap and rubber seal from the watertight inlet tube seal assembly. This makes it easier to install the inlet tube since the rubber seal is a tight fit. Lower the inlet tube through the flange assembly and into the inlet receiver on the BAM, making sure that the inlet tube is fully seated. It is very important for the inlet tube to be perpendicular to the top of the BAM. The nozzle may bind if the inlet is misaligned. A simple check is to rotate the inlet tube back and forth by hand before tightening the roof flange seal or the BAM inlet set screws. If the inlet tube is straight, then the tube should rotate fairly easily while inserted into the BAM. If it does not rotate, check the inlet tube for vertical alignment or move the BAM slightly.

   Note: Some users report improved RH control performance in the BAM-1020 when the vertical inlet tube is covered with a foam insulation sleeve from the bottom of the shelter ceiling down to the inlet heater, especially in applications where a shelter air conditioner may be blowing across the inlet tube. Met One now recommends insulating the inlet tube in walk-in shelters. Gray hot water pipe insulation is appropriate, and is available at any hardware store.

4. **Smart Inlet Heater Installation:** Before tightening the inlet tube in place, the BX-827 or BX-830 smart inlet heater (used on most BAM-1020 units) must be installed onto the tube. Lift the inlet tube out of the top of the BAM, and pass the tube through the hole in the heater body (the cable end is the bottom). Then re-insert the inlet tube into the BAM. Position the bottom of the smart heater unit **two inches** above the top of the inlet receiver on the BAM, and securely tighten the two set screws in the heater to fasten it to the tube.

   Included with the smart heater is a 12" tube of white insulation. The tube is split down its length for easy application. Wrap the insulation around the heater body and peel back the adhesive cover strip to secure in place. The insulation may be cut to fit if needed. The insulation sleeve provides more consistent heating, and also prevents items from coming into contact with the hot heater body.

5. **Smart Heater Electrical Connections:** All generations of the BX-827/830 Smart Heater have the same green metal power connector. However, there are two different configurations for the way the heater plugs into the BAM depending on the heater control relay location. Make sure that you recognize which of the two following configurations you have.

   Most units built between 2008 and 2012 were supplied with an external gray relay module which plugs into a mating **black plastic connector on the back of the BAM-1020**. The Smart Heater connector plugs into the green connector on the top of this relay module, as shown in the left photo below. These external relay modules have their own AC power cord to supply power to the heater, and have a 3A fuse inside.

In the other possible configuration of the kit, the green metal Smart Heater connector simply plugs directly into the mating **green metal connector on the back of the BAM-1020**. The heater relay is located inside the BAM, and the heater power comes from the BAM AC power supply at line voltage and frequency, and is fused by the main 3.1A fuses in the power input module.

Warning! It is possible to incorrectly force the green metal heater connector into the black plastic connector on a BAM which is configured to use the external relay, even though both connectors have male pins. If this is done the BAM will not be damaged, but the heater will not function and no sample RH control will occur!

Warning! The heater relay controls live AC line voltage to the green socket in either version. Treat the green socket like a live power outlet whenever power is applied. Do not open or service the relay module or heater module when power is applied.

Warning! The Smart Heater has triple redundant safety features to prevent overheating, but the heater surface temperature can exceed 70 degrees C during high humidity conditions. Use the white insulation sleeve to prevent contact with the heater during operation.

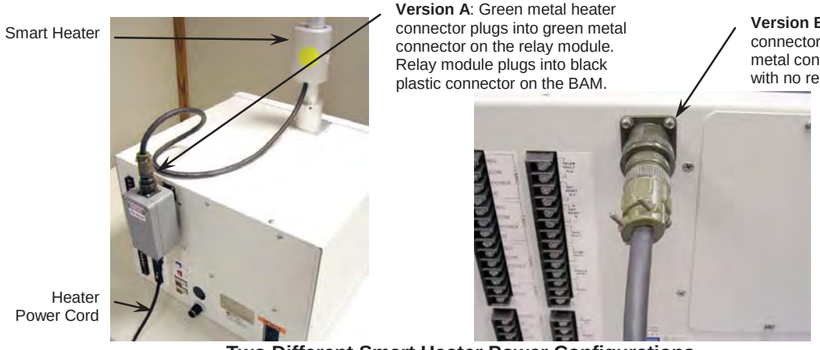

Two Different Smart Heater Power Configurations

6. **Tightening the Inlet:** After the inlet tube is aligned and the heater installed, slide the black rubber seal and white cap down over the top of the inlet tube and into the roof flange. It is easier if you wet the rubber seal with water first. Tighten the white plastic cap. Tighten the two set screws in the top of the BAM inlet receiver.
7. **Inlet Support Struts:** The BX-801 inlet kit comes with two angled aluminum struts to support the inlet tube above the roof and prevent the inlet from moving in the wind. These struts are typically fastened (about 90 degrees apart) to the inlet tube with a supplied hose clamp. The bottom ends of the struts should be fastened to the roof with lag bolts (not supplied). Some installations may require different methods or hardware for supporting the inlet tube. Support the tube in the best manner available. The BX-902/903 mini shelters do not require inlet tube supports.
8. **Temperature Sensor Installation:** BAM-1020 units are supplied with a BX-592 (temperature only) or BX-596 (AT/BP) sensor, which attaches to the inlet tube above the roof. The sensor cable must route into the shelter to be attached to the BAM. Use a waterproof cable entry point or weatherhead if your shelter has one. The BX-902/903

mini shelters have a cable entry on the side. Route the cable into the shelter in the best manner available. In some cases you may need to simply drill a 3/8” hole through the roof a few inches away from the inlet tube, route the cable through the hole and caulk it to prevent leaks. The BX-596 sensor attaches directly to the inlet tube with a supplied U-bolt. If using a BX-592, fasten the aluminum cross-arm to the inlet tube, and clip the temperature probe to the cross-arm.

Connect the cable to the terminals on the back of the BAM as follows. Additional optional Met One auto ID sensors may be connected to channels 1 through 5 to log other meteorological parameters. Details on these optional sensor connections are given in Section 10.2 of this manual.

BX-596 AT/BP Sensor	
Wire Color	**Terminal Name**
Yellow	Channel 6 SIG
Black/Shield	Channel 6 COM
Red	Channel 6 POWER
Green	Channel 6 ID
White	Channel **7** SIG

BX-592 AT Sensor	
Wire Color	**Terminal Name**
Yellow or White	Channel 6 SIG
Black/Shield	Channel 6 COM
Red	Channel 6 POWER
Green	Channel 6 ID

9. **Inlet Separator Heads:** For PM_{10} monitoring, the BX-802 Size-Selective Inlet is installed directly onto the inlet tube with no cyclone. To configure the BAM-1020 as a $PM_{2.5}$ FEM monitor, install the $PM_{2.5}$ Very Sharp Cut Cyclone beneath the PM_{10} head as shown below. Use o-ring lubricant as needed. Note: Foreign $PM_{2.5}$ configurations may use an SCC cyclone instead of a VSCC cyclone.
10. **Inlet Tube Grounding:** The two ¼”-20 set screws located in the inlet receiver of the BAM should create a ground connection for the inlet tube to prevent static electricity from building up on the inlet tube under certain atmospheric conditions. This is also important in areas near electromagnetic fields, high voltage power lines, or RF antennas. Check the connection by scraping away a small spot of the clear anodizing near the bottom of the inlet tube, and use a multimeter to measure the resistance between this spot and the “CHASSIS” ground connection on the back of the BAM. It should measure only a couple of Ohms or less if a good connection is made with the set screws. If not, remove the set screws and run a ¼-20 tap through the holes. Then reinstall the screws and check the electrical resistance again. **Note:** Anodized aluminum surfaces are non-conductive.
11. **Pump Location and Installation:** The best location for the vacuum pump is often simply on the floor under the rack or bench, but it may be located up to 25 feet away if desired. It may be preferable to locate the pump so that noise is minimized if the unit is in an area where personnel are present. If the pump is to be enclosed, ensure that it will not overheat. The Gast pumps have a thermal shutdown inside which may trip if overheating occurs. Route the clear 10mm air tubing from the pump to the back of the BAM unit, and insert it firmly into the compression fittings on both ends. The tubing should be cut to the proper length and the excess tubing saved.

    The pump is supplied with a 2-conductor signal cable which the BAM uses to turn the pump on and off. Connect this cable to the terminals on the back of the BAM marked “PUMP CONTROL” The end of the cable with the black ferrite filter goes toward the

BAM. The cable has no polarity, so either the red or black wire can go to either terminal. Connect the other end of the cable to the two terminals on the pump.

There are two pump types available for the BAM-1020. The Gast rotary vane pumps are louder and draw considerably more power than the Medo linear piston pumps, but have better vacuum capacity, especially at higher altitude or in 50 Hz applications. The Medo pumps are smaller, quieter, and more efficient, but aren't recommended for 50 Hz use.

12. **Optional External Data Logger Connections:** The BAM-1020 has an analog output which may be recorded by a separate data logger if required. Connect the terminals on the back of the BAM marked "VOLT OUT +, -" to the data logger with 2-conductor shielded cable (not supplied). Polarity must be observed. The logger input must be correctly scaled in order to log the voltage accurately! Information on configuring this analog output is provided in Section 8 of this manual. A current loop output is also available.

    Newer data loggers often interface to the BAM-1020 using the digital serial ports for better accuracy. Information about this is also found in Section 8. Met One can also supply additional technical bulletins on the subject.

    The BAM-1020 has a variety of other telemetry I/O relays, error relays, and serial data connections located on the back of the unit as shown below. These items are described in Section 8 and Section 9 of this manual.

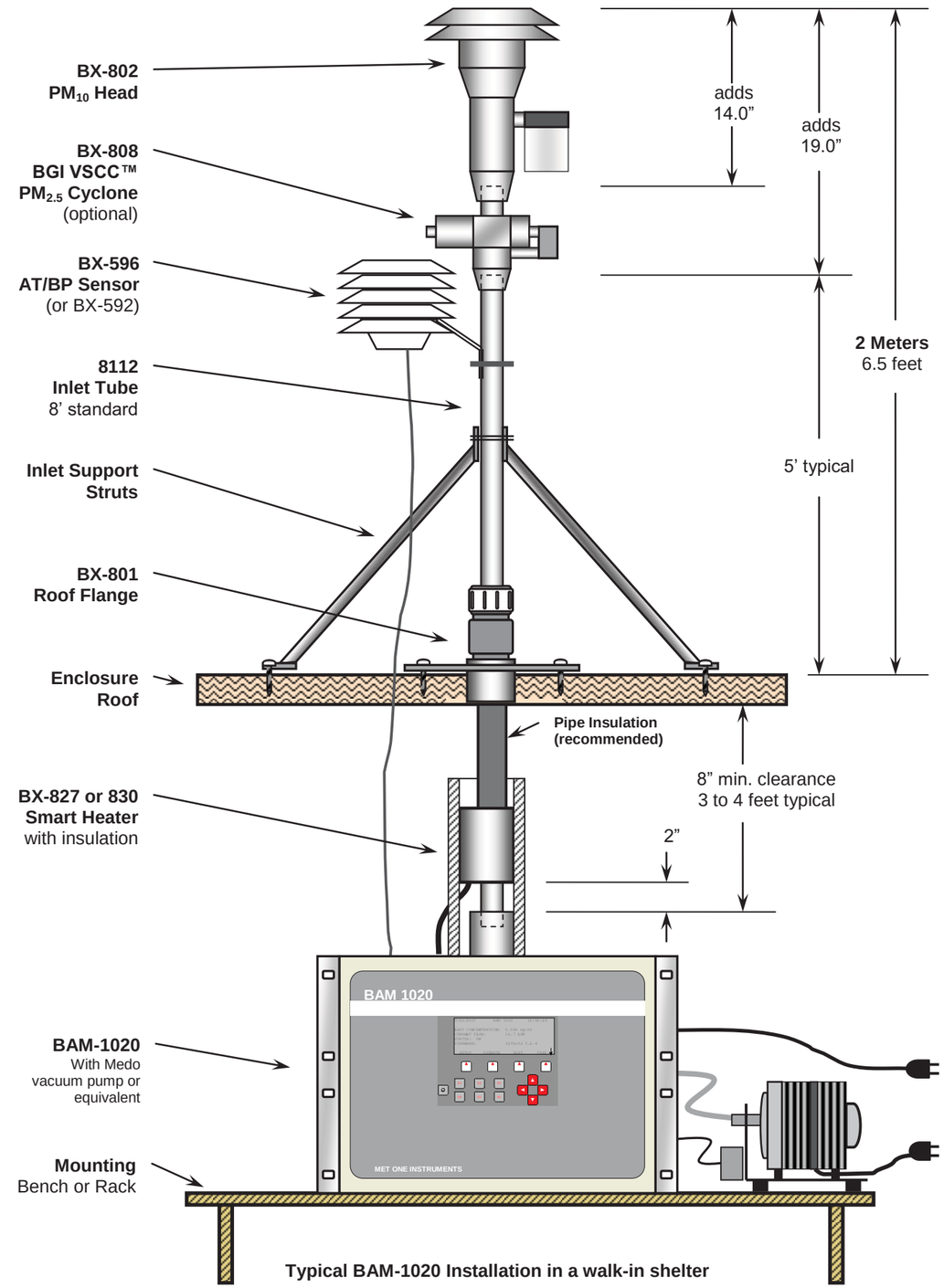

Typical BAM-1020 Installation in a walk-in shelter

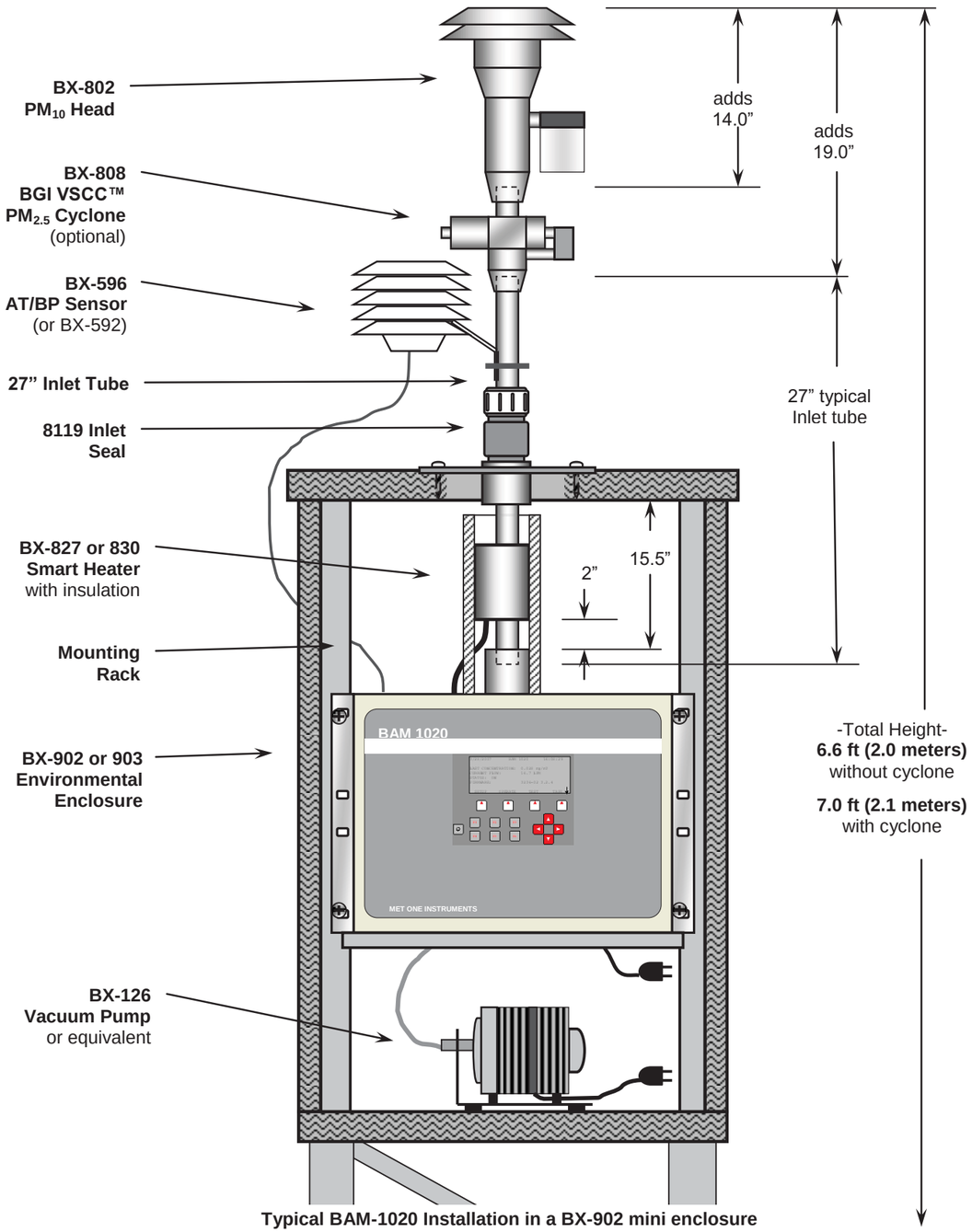

Typical BAM-1020 Installation in a BX-902 mini enclosure

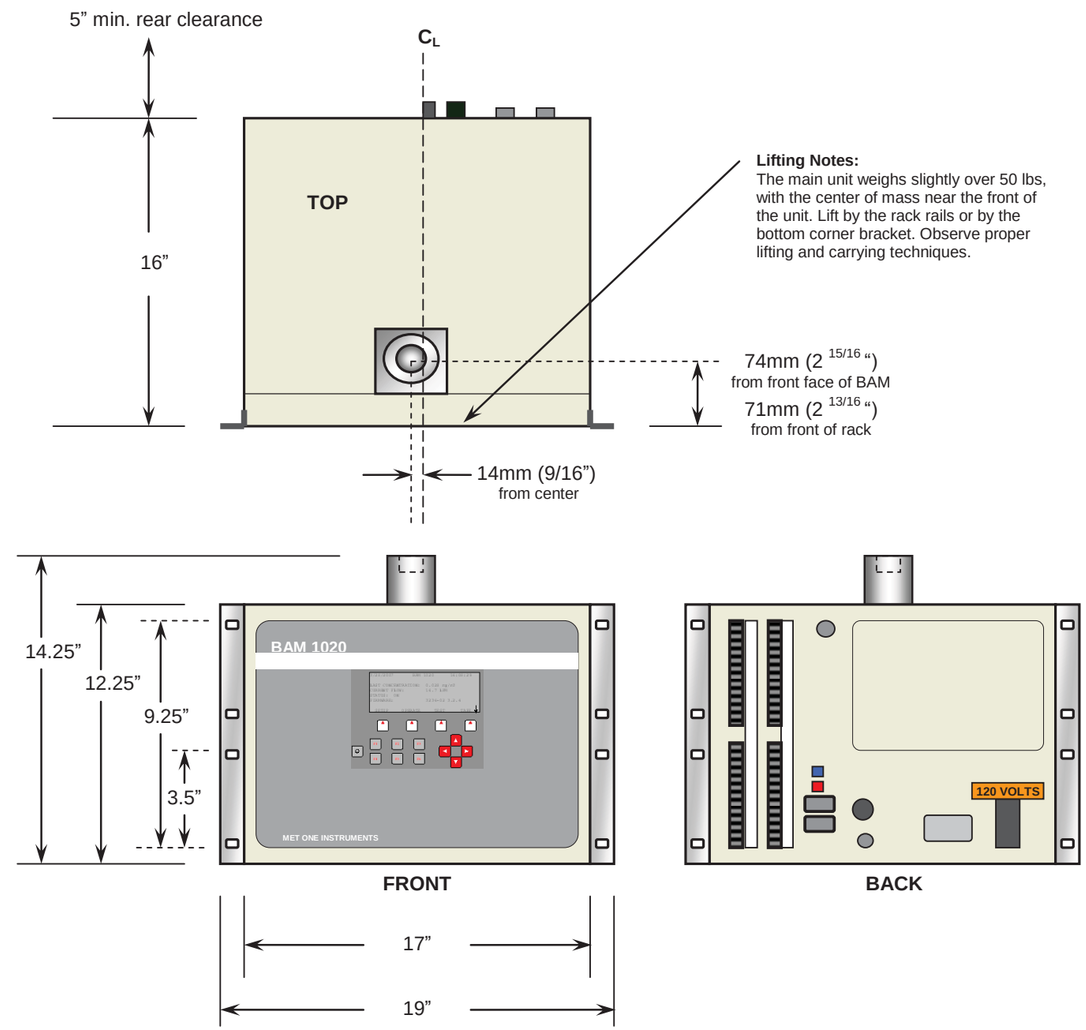

BAM-1020 mounting dimensions

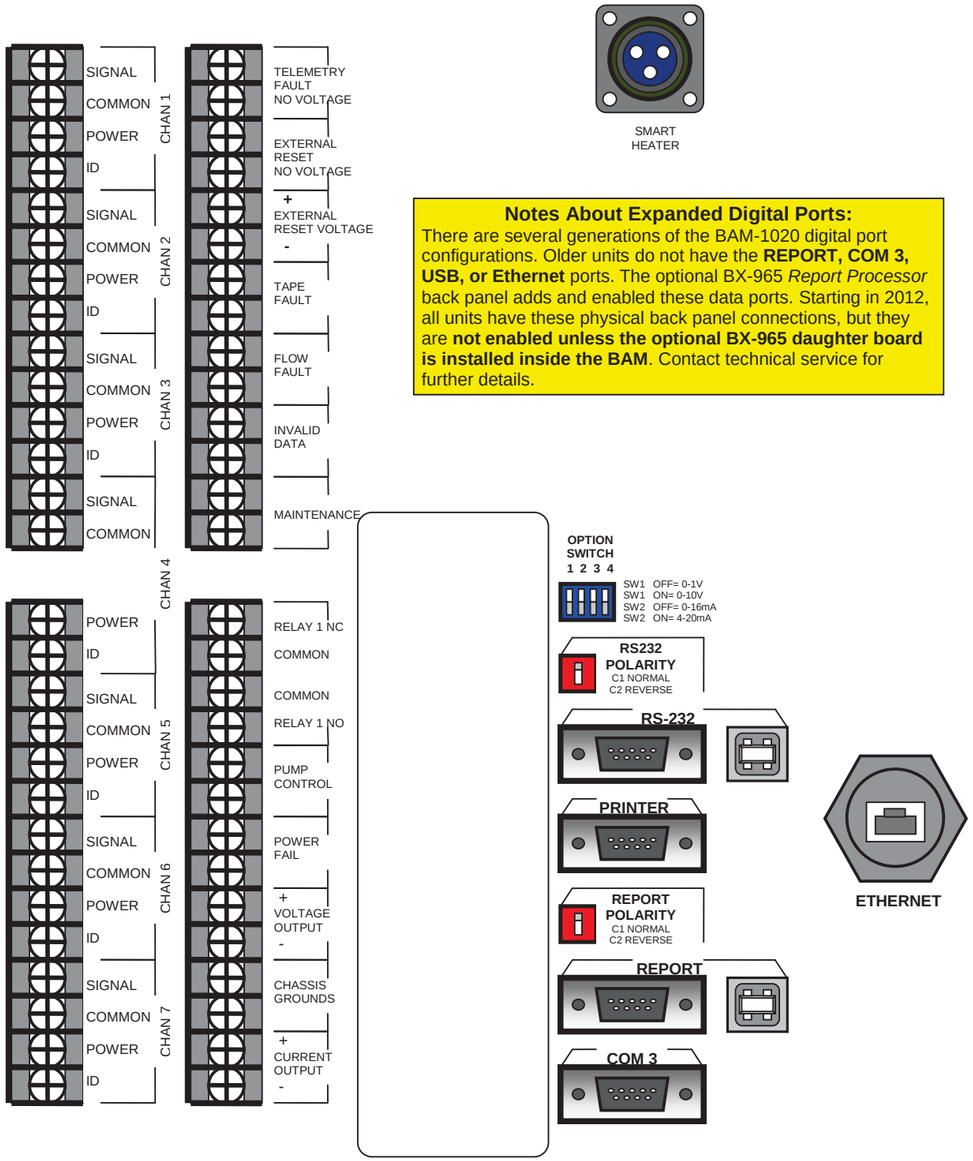

Notes About Expanded Digital Ports:
There are several generations of the BAM-1020 digital port configurations. Older units do not have the **REPORT, COM 3, USB, or Ethernet** ports. The optional BX-965 *Report Processor* back panel adds and enabled these data ports. Starting in 2012, all units have these physical back panel connections, but they are **not enabled unless the optional BX-965 daughter board is installed inside the BAM**. Contact technical service for further details.

BAM-1020 Rear Panel Connections

2.6 BAM-1020 Power and Electrical Service

The BAM-1020 uses internal 120V AC motors for the tape control system, so the power supply is factory-wired to run on **either 110-120V or 220-240V, and either 50Hz or 60Hz**. The external vacuum pump and inlet heater are also AC powered and voltage-specific, and should match the voltage setting of the BAM. Note: The pump power cord is hardwired, and may need to be replaced or adapted to match local outlet types outside of North America.

Warning: Your shelter and/or electrical service must be wired for the correct voltage and frequency in accordance with local electrical codes. Running the BAM-1020, vacuum pump, or inlet heater on incorrect line voltage or frequency will cause improper operation.

The current draw of the system varies considerably depending on optional accessories and environmental conditions. A dedicated 15 Amp electrical circuit is generally adequate to run a single complete BAM-1020 system, unless a large air conditioner is on the same circuit. Consult a qualified electrician if unsure. A summary of some worst-case loads is given below:

Model	Description	Amps	Wattage
BAM-1020	BAM-1020 only, 120V, worst case with tape transport motors running.	**0.17A**	**20W**
BX-126	Medo Linear Piston Pump, 120V, 60Hz, at 16.7 L/min through clean tape.	**1.25A**	**150W**
BX-127	Medo Linear Piston Pump, 230V, 50Hz, at 16.7 L/min through clean tape.*	**0.55A**	**125W**
BX-121	Gast Rotary Vane Pump, 120V, 60Hz, at 16.7 L/min through clean tape.	**4.44A**	**530W**
BX-122	Gast Rotary Vane Pump, 230V, 50Hz, at 16.7 L/min through clean tape.	**2.30A**	**530W**
BX-827	Smart Inlet Heater, 120V, 60Hz, running at 100% high RH duty cycle.	**0.85A**	**100W**
BX-830	Smart Inlet Heater, 230V, 50Hz, running at 100% high RH duty cycle.	**0.76A**	**175W**
BX-902B	Shelter One Mini Shelter, 120V, worst case with shelter heater ON	**4.2A**	**500W**
BX-903	Ekto Mini Shelter, 120V, 2000 BTU air conditioner.	**7.4A**	**586W**
BX-904/906	Ekto Mini Shelter, 120V, 4000 BTU air conditioner.	**13.5A**	**1172W**

Notes:

- The BAM transport motors only run for a few seconds each per hour. Quiescent BAM current is 0.1A.
- The vacuum pump runs for either 42 or 50 minutes per hour. Startup inrush current is higher.
- *The BX-127 Medo pump is not recommended for 50Hz applications due to marginal vacuum capacity.
- Smart Heater wattage drops to idle at 20% (120V) or 6% (230V) when filter RH is below 35%.
- The BX-902B shelter heater is usually off whenever shelter temp is over 40 degrees F, and can be disabled.
- Values are based on measurements or best available information. Additional information is available from Service.

Fuses: There are two 5x20mm, 3.15A, 250V fuses located inside the BAM power switch module on the back of the BAM. They can be accessed by prying open the top of the small cover surrounding the switch. The power cord must be removed in order to open this cover.

Power Outages and Battery Backup: Any momentary AC power outages will reset the BAM CPU and prevent data collection for the sample hour. The BAM may be plugged into a PC-style uninterruptible power supply (UPS) battery back-up unit to prevent this. A UPS of at least 300 Watts is usually sufficient. The vacuum pump does not need to be connected to the UPS, because the BAM can compensate for short pump flow outages of less than 1 minute duration. If the pump is to be backed up, then a much larger UPS wattage is required.

Chassis Ground: Connect one of the terminals marked “CHASSIS” on the back of the BAM to an earth ground point, using the green/yellow ground wire supplied with the unit. A copper earth-ground rod is recommended. The chassis ground is primarily for added RFI/EMI noise immunity. The BAM-1020 also uses the standard electrical safety ground in the power cord.

3 INITIAL SETUP OF YOUR BAM-1020

This section describes the process for setting up and configuring your BAM-1020, as well as the basic steps required to put the unit into operation. Some of the topics in this section will direct you to other sections of this manual for more detailed information. It is assumed that the unit is already installed and sited as described in Section 2. In some cases it is useful to first set up the BAM-1020 unit on a test bench before deployment or installation in order to explore the functions of the unit and perform setups. The following steps for starting up your unit are described in this section:

1. **Power on and warm up the unit.**
2. **Familiarize yourself with the user interface.**
3. **Load a roll of filter tape.**
4. **Perform a Self-Test.**
5. **Set the real-time clock, and review your SETUP parameters.**
6. **Perform a leak check and a flow check.**
7. **Return to the top-level menu and wait for automatic start at the top of the hour.**
8. **View the OPERATE menus during the cycle.**

3.1 Power Up

The BAM-1020 power switch is located on the back of the unit above the power cord. Verify that the unit is plugged in to the correct AC voltage, and that any electrical accessories are correctly wired before turn the unit on. (Section 2.6) When power is switched on, the main menu screen should appear after a few seconds as shown below. The unit will probably flash an error indicating that there is no filter tape installed. Note: Units running revision 3.1 or earlier firmware will display a slightly different main menu screen.

3.2 Warm-up Period

The BAM-1020 must warm up for at least one hour before valid concentration data can be obtained. This is because the beta detector contains a vacuum tube which must stabilize every time the unit is powered up. This also allows the electronics to stabilize for optimal operation. This applies any time the unit is powered up after being off for more than a moment. Instrument setups and filter tape installation can be performed during this warm up time. Most agencies choose to discard the first few hours of concentration data after the BAM is powered up.

3.3 The Main Menu and Using the Keypad and Display

When the BAM-1020 is powered up it will display the main menu (top level menu) on the LCD display. This menu is the starting point for all functions of the BAM-1020 user interface. Note: The main menu will have a slightly different layout on BAM-1020 units configured in the dual-unit PM-coarse configuration.

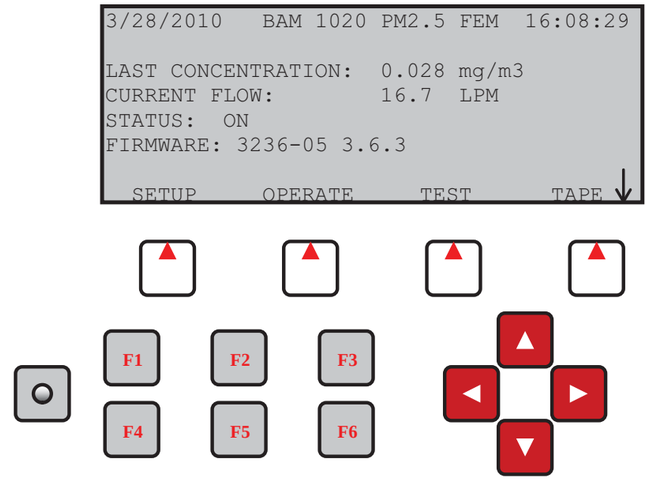

The BAM-1020 Standard User Interface and Keypad

Soft Keys:
Directly beneath the display are four white buttons called “soft-keys” or “hot-keys”. These are dynamic keys where the function changes in response to a menu option displayed directly above each key on the bottom row of the display. Whatever menu option is displayed above one of these keys is the function which that key will perform in that particular menu. These are used throughout the entire menu system for a variety of functions. For example, modifications made within a menu are usually not saved unless a SAVE soft-key is pressed. EXIT is also another common soft-key function.

Arrow (Cursor) Keys:
The four red arrow keys are used to scroll up, down, left, and right to navigate in the menu system, and to select items or change fields on the screen. The arrow keys are also often used to change parameters or increment/decrement values in the menu system.

Contrast Key:
The key with a circular symbol on it is for adjusting the light/dark contrast on the LCD display. Press and hold the key until the desired contrast is achieved. It is possible to over-adjust the contrast and make the entire display completely blank or completely dark, so be careful to set it to a visible level or it may appear that the unit is not operating.

Function Keys F1 to F6:
The function keys serve as shortcuts to commonly used menu screens. The **F** keys are only functional from the main menu screen, or for entering passwords. The factory default password is F1, F2, F3, F4.

> **F1 “Current”:** This key is a shortcut to the OPERATE > INST screen, used to display instantaneous data values being measured by the BAM-1020. See section 3.12.
>
> **F2 “Average”:** This key is a shortcut to the OPERATE > AVERAGE screen, used to display the latest average of the data recorded by the BAM-1020. See Section 3.13.

F3 “Error Recall”: This key allows the user to view the errors logged by the BAM-1020. The errors are sorted by date. The last 12 days which contain error records are available, and the last 100 errors can be viewed.

F4 “Data Recall": This key allows the user to view the data stored in the BAM-1020, including concentrations, flow, and all six external channels. The data is sorted by date, and the user can scroll through the data hour-by-hour using the soft-keys. Only the last 12 days which contain data records are available for viewing in this menu.

F5 “Transfer Module”: This key is used to copy the memory contents to an optional data transfer module. The transfer module option is obsolete and no longer used.

F6: This key is not assigned a data function.

3.4 Filter Tape Loading

A roll of Met One glass fiber filter tape must be loaded into the BAM-1020 for sampling. A roll of tape will last more than 60 days under normal operation. It is important to have spare rolls available to avoid data interruptions. Some agencies save and archive the used filter tape, although the used sample spots are not protected from contamination, and are not marked to indicate the sample hour or site. Chemical analysis may be affected by the binder agent in the tape. Used filter tape should never be “flipped over” or re-used! This will result in measurement problems. Loading a roll of filter tape into the Bam-1020 is a simple matter using the following steps:

1. Turn on the BAM-1020. The unit should automatically raise the sample nozzle.
2. Lift the rubber pinch roller assembly and latch it in the UP position.
3. Unscrew and remove the two clear plastic reel covers.
4. An empty core tube **MUST** be installed on the left (take-up) reel hub. This provides a surface for the used tape to spool upon. Met One supplies a plastic core tube to use with the first roll of tape. After that, you can use the empty core tube left over from the previous roll. Never fasten the filter tape to the aluminum hub.
5. Load the new roll of filter tape onto the right (supply) reel, and route the tape through the transport assembly as shown in the drawing. Attach the loose end of the filter tape to the empty core tube with adhesive cellophane tape or equivalent.
6. Rotate the tape roll by hand to remove excess slack, then install the clear plastic reel covers. The covers must be tight in order to properly clamp the tape in place and prevent slipping.
7. Align the filter tape so that it is centered on all of the rollers. Newer units have score marks on the rollers to aide in visually centering the tape.
8. **Unlatch and lower the pinch roller assembly onto the tape. The BAM-1020 cannot automatically lower the rollers, and the unit will not operate if the pinch rollers are left latched in the up position!**
9. Press the TENSION soft-key in the TAPE menu. The BAM-1020 will set the tape to the correct tension and alert you if there was an error with the process. Exit the menu.

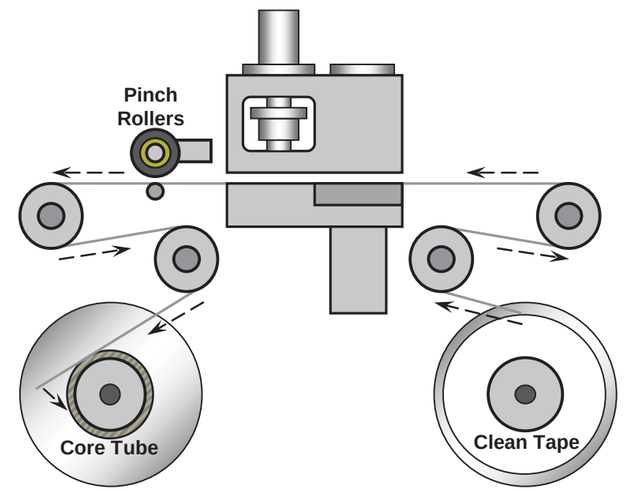

BAM-1020 Filter Tape Loading Diagram

3.5 Self-Test

The BAM-1020 has a built-in self-test function which automatically tests most of the tape control and flow systems of the unit. The self-test should be run right after each time the filter tape is changed, and it can also be used if the operator suspects a problem with the unit. More detailed diagnostic test menus are also available in the BAM, and those are described in the troubleshooting Section 7.

The self-test feature is located in the TAPE menu. Press the SELF TEST soft-key to start the test. The tests will take a couple of minutes, and the BAM-1020 will display the results of each tested item with an **OK** or a **FAIL** tag. If all of the test items are OK, the status will show SELF TEST PASSED as shown in the drawing below. If any item fails, the status will show ERROR OCCURRED.

```
02/08/1999          15:29:30
LATCH: OFF          TAPE BREAK: OK
CAPSTAN: OK         TAPE TENSION: OK
NOZZLE DN: OK       SHUTTLE: OK
NOZZLE UP: OK       REF EXTEND: OK
FLOW: OK            REF WITHDRAW: OK
Status:   SELF TEST PASSED
TENSION   SELF TEST                EXIT
```

Self-Test Status Screen

LATCH: This will show OFF if the photo interrupter senses that the pinch rollers are unlatched (down) as in normal operation. It will show ON if the roller assembly is latched in the up position. The tape cannot advance if the rollers are up!

CAPSTAN: The unit will rotate the capstan shaft forward and backwards and will check if the photo interrupter sees the shaft rotating. The Capstan shaft is what moves the filter tape back and forth.

NOZZLE DN: The unit will attempt to lower the nozzle, and will check if the nozzle motor has moved to the down position with a photo interrupter. It is possible for the nozzle to become stuck in the UP position, even if the nozzle motor has successfully moved to the DOWN position. For this reason, proper inlet alignment and nozzle o-ring maintenance is necessary.

NOZZLE UP: The unit will attempt to raise the nozzle, and will check if the nozzle motor has moved to the up position with a photo interrupter.

FLOW: The unit will attempt to turn the pump on, and will then look for output on the flow sensor. This test takes about a minute and will fail if the pump is not connected.

TAPE BREAK: The unit will move the supply and take-up motors to create slack in the filter tape, and look for proper operation of the tensioner photo interrupters.

TAPE TENSION: The unit will tension the filter tape, and then check the condition of the tensioner photo interrupters.

SHUTTLE: The unit will attempt to move the shuttle beam left and right, and will check the motion with a photo interrupter.

REF EXTEND: The unit will attempt to extend the reference membrane, and will check the motion with a photo interrupter.

REF WITHDRAW: The unit will attempt to withdraw the reference membrane, and will check the motion with a photo interrupter.

3.6 Initial SETUP Settings Considerations

The BAM-1020 comes pre-programmed with a wide array of default values for the settings which govern the measurement and calibration. Most of these setup values will not be changed, since the default values are correct for most applications. You will need to review the Setup Menus in Section 6 of this manual and decide if any values need to be changed. At the very least, review the following parameters:

1. Set the system clock in the SETUP > CLOCK menu. The BAM-1020 clock may drift as much as two minutes per month. It is important to check the clock at least once per month to ensure the samples are performed at the correct times.
2. Review the BAM SAMPLE, COUNT TIME, MET SAMPLE, RANGE, and OFFSET values in the SETUP > SAMPLE menu.
3. Review the FLOW RATE, FLOW TYPE, CONC TYPE, and HEATER CONTROL settings in the SETUP > CALIBRATE menu.
4. Review the scaling of any external sensors in the SETUP > SENSORS menu.
5. Review the Smart Heater control settings in the SETUP > HEATER menu.

3.7 Initial Leak Check and Flow Check

The BAM-1020 comes with factory-set flow calibration parameters which will allow the unit to accurately control the 16.7 L/min sample flow system right out of the box. However, due to minor variations between different types of flow transfer standards, it is best to calibrate the BAM flow system with your own traceable flow audit standard. Perform leak checks and flow checks/calibrations as described in Section 5. Become comfortable with these processes, as they will be performed on a routine basis.

3.8 Starting a Measurement Cycle

When the preceding setup steps of Section 3 have been completed, exit out to the main top level menu. The “Status” line should display “ON” (no errors). If so, the unit will start at the top (beginning) of the next hour, and will continuously operate until commanded to stop.
The unit will stop if the operator enters any of the SETUP or TEST menus. The BAM-1020 will also stop itself if a non-correctable error is encountered, such as broken filter tape or failed air flow.

3.9 Accessing the Flow Statistics Screen

While the BAM-1020 is displaying the main menu screen, the ▼ button can be pressed and the BAM will display a FLOW STATISTICS screen as shown below. This screen displays the flow, temperature and pressure statistics for the current measurement cycle. Pressing the ▼ key again will further scroll down to the remaining parameters below the viewable area of the display. This screen will not interrupt the sample cycle. This function is only available with revision 3.2 firmware or later.

```
03/28/2007   FLOW STATISTICS    16:26:30
 SAMPLE START: 2007/03/28 16:08:30
      ELAPSED: 00:18:00
    FLOW RATE: 16.7 LPM
 AVERAGE FLOW: 16.7 LPM
      FLOW CV: 0.2%
       VOLUME: 0.834m3
                                  EXIT
     FLOW FLAG: OFF
            AT: 23.0
        MAX AT: 23.5
    AVERAGE AT: 23.0
        MIN AT: 22.5
            BP: 760
        MAX BP: 765
    AVERAGE BP: 760
        MIN BP: 755
```

The FLOW STATISTICS Screen

3.10 The OPERATE Menus

Press OPERATE soft-key at the main menu to enter operate menu as shown below. This will not interrupt the sample if already running.

```
11/15/2006   OPERATE MODE       14:13:07

       ↑ = ON
       ↓ = OFF
Operation Mode: ON
        Status: ON

  NORMAL     INST    AVERAGE     EXIT
```

The OPERATE Menu

The DOWN arrow can be used to set the Operation Mode from ON to OFF. This will simply stop the measurement cycle, but will not power-down the BAM-1020. **NOTE: Even if the operator sets the Operation Mode to OFF, or the unit stops itself due to an error, it will still automatically set the mode back to ON at the top of the hour, and try to run a new cycle!** The only ways to prevent the unit from automatically starting an hourly cycle are to power off the unit, leave the unit in a TEST or SETUP menu, or leave the pinch rollers latched in the UP position.

The OPERATE menu has three soft-key options for viewing the operating status and sensor measurements while the unit is operating: NORMAL, INST, and AVERAGE.

3.11 The NORMAL Operation Screen

Normal Mode is the primary operation screen which displays most of the important parameters of the sample progress in one place, as shown below. Many operators leave their BAM-1020 in the NORMAL screen whenever the unit is operating, instead of the Main menu.

```
11/15/2009         Normal Mode       11:27:54
                              Flow: 16.7 LPM
                            AMB P: 764 mmHg
LAST C: 0.061 mg/m3        TAPE P: 584 mmHg
LAST m: 0.806 mg/cm2           RH: 27 %
                            Heater: OFF
                          Delta-T: 4.2 C
STATUS: SAMPLING                     EXIT
```

The NORMAL Operation Menu

The **LAST C** value indicates the last concentration record, updated at the end of the cycle. The **LAST m** value indicates the last measured value of the reference span membrane. The value should be very close or equal to the expected span value (**ABS**). The other values are instantaneous measurements.

3.12 The INSTANTANEOUS and AVERAGE Operation Screens

The INST (Instantaneous) screen displays the instantaneous data values that are being measured by the BAM-1020. This screen is useful for monitoring the current reading of any optional sensors that may be connected to the BAM-1020. All values except **Conc** (concentration) and **Qtot** (total flow volume) are current. The Conc represents the concentration of the last period. Qtot represents total flow volume during the last period.

```
11/15/2009                          11:27:54
          Eng Units              Eng Units
1 Conc    0.010 mg   2 Qtot      .834 m3
3 WS      0.000      4 WD        0.000
5 BP      0.000      6 RH        0.000
7 SR      0.000      8 AT        0.000

                     VOLT/ENG     EXIT
```

The Instantaneous Menu

The VOLT / ENG soft-key toggles the displayed values between units and voltages, useful for diagnostic checks on external sensors.

The AVERAGE screen is the same as the INST screen shown above, except that the concentration and flow are presented as the previous hour's average values, and the six external datalogger channels are average values over the average period of the data logger (set by the MET SAMPLE value in the SETUP > SAMPLE menu - usually also 60 minutes).

4 THE MEASUREMENT CYCLE

This section describes the measurement and timing cycle of the BAM-1020 instrument. A clear understanding of the measurement is helpful for the effective operation and maintenance of the unit. For advanced information on the underlying theory and mathematics of the measurement see Theory of Operation, Section 11.

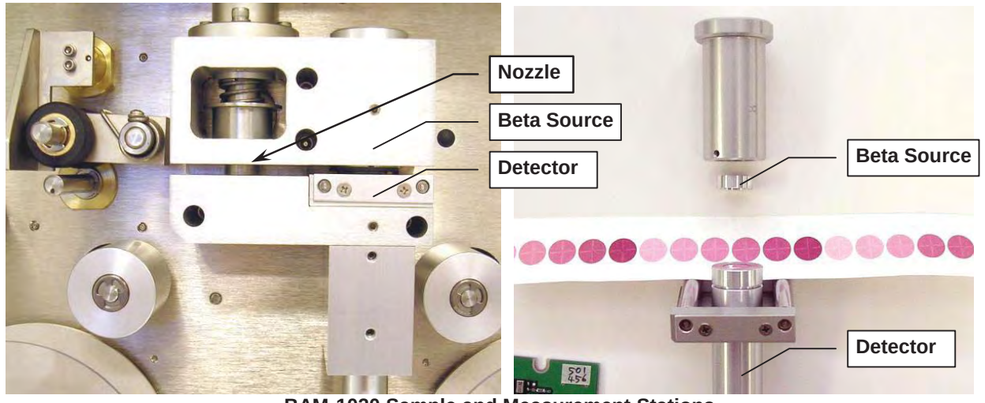

BAM-1020 Sample and Measurement Stations

4.1 The One-Hour Cycle Timeline

The BAM-1020 is almost always configured to operate on 1-hour cycles. The unit has a real-time clock which controls the cycle timing. You will see from the following timeline that the unit makes an 8-minute beta measurement at the beginning and the end of each hour, with a 42 minute air sample period in between, for a total of 58 minutes. The other two minutes of the hour are used for tape and nozzle movements during the cycle. This timeline applies if the unit is set for a COUNT TIME of 8 minutes, which is required for all EPA and EU designated $PM_{2.5}$ configurations.

Units sold for PM_{10} operation only do not have the option of 8-minute counts, only 4 minutes. In this case, the beta counts at the beginning and end of the hour are only 4 minutes long, with a 50 minute air sample in between. Again, the total adds up to 58 minutes. **Note:** This cycle will be slightly altered if the unit is operated in the special Early Cycle mode with an external datalogger. See Section 8.

1. **Minute 00:** The beginning of an hour. The BAM-1020 immediately advances the filter tape forward one “window” to the next fresh, unused spot on the tape. This takes a few seconds. The new spot is positioned between the beta source and the detector, and the BAM begins counting beta particles through this clean spot for exactly eight minutes. (I_0)
2. **Minute 08:** The BAM-1020 stops counting beta particles through the clean spot (I_0), and moves the tape exactly four windows forward, positioning that same spot directly under the nozzle. This takes a few seconds. The unit then lowers the nozzle onto the filter tape and turns the vacuum pump on, pulling particulate-laden air through the filter tape on which I_0 was just measured, for 42 minutes at 16.7 liters per minute.

3. **Minute 50:** The BAM-1020 turns the vacuum pump off, raises the nozzle, and moves the filter tape backwards exactly four windows. This takes a few seconds, and puts the spot that was just loaded with particulate back between the beta source and the detector. The BAM begins counting beta particles through the now dirty spot of tape for exactly eight minutes (I_3).
4. **Minute 58:** The BAM-1020 stops counting beta particles through the dirty spot (I_3). The unit uses the I_0 and I_3 counts to calculate the mass of the deposited particulate on the spot, and uses the total volume of air sampled to calculate the concentration of the particulate in milligrams or micrograms per cubic meter of air. The BAM then sits idle and waits a few moments for any remaining time in the hour to expire.
5. **Minute 60:** The beginning of the next hour. The BAM-1020 instantly records the just-calculated concentration value to memory and sets the analog output voltage to represent the previous hour’s concentration. The unit advances a new fresh spot of tape to the beta measurement area and the whole cycle starts over…

4.2 Automatic Span Checks During The Cycle

While the vacuum pump is on and pulling air through the filter tape as described above, the BAM-1020 doesn’t have anything else to do, so it performs an automatic check of its calibration (a span check), and checks for instrument drift caused by varying external parameters such as temperature, barometric pressure, and relative humidity. No span corrections are made. This check is performed every hour automatically as follows:

1. **Minute 08:** The BAM-1020 has just finished moving the clean spot to the nozzle and turned the pump on. There is another clean spot of filter tape upstream four windows, between the beta source and the detector. This same spot will stay there for the entire time the pump is on (usually 42 minutes), as the tape cannot move with the nozzle down. The BAM begins counting the beta particles through this spot for exactly eight minutes (I_1).
2. **Minute 16:** The BAM-1020 stops counting beta particles through this spot (I_1), and extends the Reference Membrane between the beta source and the detector, directly above the spot of filter tape that was just measured. The Reference Membrane is an extremely thin film of clear Mylar held in a metal tongue. The membrane usually has a mass of about .800 mg. The BAM starts counting beta particles for eight minutes again, this time through the membrane *and* the filter tape spot at the same time (I_2).
3. **Minute 24:** The BAM-1020 stops counting beta particles through the membrane (I_2), withdraws the membrane assembly, and calculates the mass of the membrane **“m”**, as if it were particulate on the filter tape spot.
4. **Minute 42:** (Eight minutes before the pump stops) The BAM-1020 counts the beta particles through the same spot again (without the membrane) for another eight minutes (called $I_{1'}$ or I_1 prime). This checks the ability of the unit to hold a constant output when measuring blank filter tape, and is not otherwise used.

The mass density ***“m”*** (mg/cm^2) of the reference membrane calculated during this automatic process is compared to the known mass of the membrane; the ***“ABS”*** value. During factory calibration, the actual mass of each individual span foil is determined and saved as the ***ABS*** value of the BAM in which it is installed. Each hourly measurement of ***m*** must match the ***ABS***

value within ±5%. If not, the unit records a “D” alarm for that hour’s data. Typically, the hourly value of ***m*** is within just a few micrograms of the expected value. This span check provides a method of internal diagnostics for the measurement system, and for the monitoring of external variables such as temperature variations or pressure changes. The ***ABS*** value is unique to each BAM-1020, and can be found on the calibration sheet. Most membrane alarms are caused by a dirty membrane foil.

4.3 Sample Period Description

The sample period is the time when the vacuum pump is pulling dust-laden air through the BAM-1020. As the air enters the inlet, it first passes through the external PM_{10} head which has a screen to keep out insects and debris, and uses inertia to separate out and trap particle larger than 10 microns in size. The air then immediately passes through the Optional $PM_{2.5}$ Very Sharp Cut Cyclone (BGI VSCC™) which further separates out and traps particles larger than 2.5 microns in size. Older non-designated $PM_{2.5}$ configurations may use a regular SCC cyclone.

The air then goes down the inlet and through the filter tape, where the remaining particles are deposited. After the sample period is completed and the particulate spot is measured, there is almost always a clearly visible spot of dirt on the filter tape where the particulate was deposited. The BAM-1020 will put the spots very close together on the tape. At exactly midnight, the BAM will skip one spot, leaving a blank spot on the tape. This is a visual aid which separates daily entries on the tape.

5 FLOW SYSTEM and FLOW CALIBRATIONS

5.1 Flow System Diagram

The BAM-1020 airflow control system is very simple and effective, consisting of only a few components. Proper operation of the flow system is critical in order to obtain accurate concentration data. Flow calibrations or audits require a traceable reference flow meter. The Bios Defender 520 or BGI deltaCal® brands are recommended. These include flow, temperature, and pressure standards in one simple unit. If FRM filter samplers or other instruments are to be collocated with the BAM, then the flow of all instruments should must be calibrated with the same standards.

The BAM-1020 is designed to operate with an airflow rate of 16.7 liters per minute (L/min or lpm). This is because size-selective inlets such as the EPA PM_{10} inlet head and $PM_{2.5}$ cyclones use the inertia of the aerosol particles as they flow through the inlet in order to sort out and trap particles above a certain size or “cut point” so that they won’t be measured by the instrument. If the airflow is too high, then particles that should get through will instead be trapped, and the concentration may measure too low. If the airflow is too low, then particles that should be trapped are instead allowed through, and the concentration may measure too high. Periodic airflow audits must be performed to ensure that the BAM-1020 maintains the flow within spec. The EPA-specified range is **±5% (±0.83 L/min)** of the 16.7 L/min design value, and **±4% (±0.67 L/min)** of NIST traceable flow standards. However, the BAM-1020 is designed to maintain the flow with an accuracy of better than ±2% (0.33 L/min).

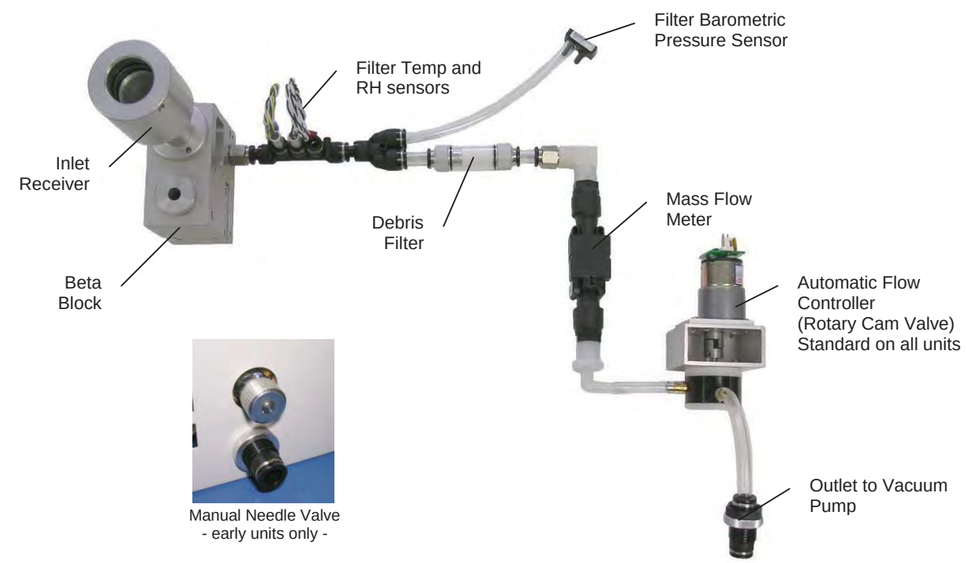

Complete BAM-1020 Flow Control System

As shown in the diagram above, all BAM-1020 units have a mass airflow sensor and a barometric pressure sensor. The BAM-1020 is also equipped with an ambient temperature sensor model BX-592 or BX-596. All units except some early PM_{10} models have an automatic flow controller. Some early units had a manual needle valve located on the back instead.

5.2 Flow Control Types – Standard or Actual Flow

BAM-1020 units with firmware revision 3.0 or later (after 2006) have both a FLOW TYPE and a CONC TYPE setting. Both can be set to either STD or ACTUAL (see Section 6.3). The unit is capable of controlling the flow using either standard or actual temperature/pressure conditions, and can independently report the particulate concentrations based on either a standard or actual volume of sampled air. BAM-1020 units with firmware revision 2.58 and earlier (pre 2007) had a single FLOW TYPE setting which set both the flow control and the concentration reporting conditions.

ACTUAL Flow:

Actual flow (sometimes called “volumetric” or “local” flow) is the most accurate flow control method, and is required for all $PM_{2.5}$ monitoring. The local ambient temperature and barometric pressure are always used to calculate the flow, and the flow is continually adjusted to compensate for any changes. The FLOW TYPE is set to ACTUAL so that the BAM will perform actual flow control, and the CONC TYPE is set to ACTUAL so that the BAM will report the concentration based on the actual sample volume. On BAM-1020 units with firmware revision 2.58 and earlier, the FLOW TYPE is set to ACTUAL. The unit will control and report actual values if a temperature sensor is connected.

STANDARD Flow:

Standard flow control is used when no ambient temperature sensor is available. The flow is calculated with the assumption that the barometric pressure is 760 mmHg (one atmosphere), and the ambient temperature is 25 degrees C, regardless of the actual local temperature and pressure. Some countries specify a standard temperature of 0 or 20C. At low altitudes and moderate temperature, standard flow will be very close to the actual flow rate. However, at high altitudes the difference between standard and actual flow will be large due to much lower barometric pressure, so standard flow control is not recommended.

PM_{10} data is almost always reported in <u>standard</u> conditions. However, the cut-point of PM_{10} inlets are rated at an <u>actual</u> 16.7 L/min flow rate. For this reason, PM_{10} BAMs should be set with a FLOW TYPE of ACTUAL and a CONC TYPE of STD. The unit will perform correct *actual* flow control, but will calculate and store *standard* flow volumes and will calculate and store the particulate concentrations based on the *standard* volume.

On units with firmware revision 2.58 and earlier, the FLOW TYPE is set to STD for PM_{10}. However, if the BAM is equipped with a temperature sensor, it will automatically identify the sensor and perform actual flow control anyway.

METERED Flow: (obsolete)

Metered flow control was used for early discount PM_{10} BAM-1020 units with a manual airflow valve. These had no automatic flow controller, and usually no temperature sensor, so the unit could not compensate for flow variations due to temperature, pressure, or filter loading. The

flow volume and concentration were stored in EPA (25C) standard conditions. Metered flow type is no longer used on production BAM-1020 units.

5.3 About Leak Checks, Nozzle Cleaning, and Flow Checks

The three critical aspects of BAM-1020 flow system maintenance are routine *leak checks, nozzle and vane cleaning, and flow checks or calibrations*. Agencies who routinely verify these three aspects almost always obtain high-quality concentration data from the unit. The minimum service interval is two months, which is the interval for replacing the filter tape. However, many agencies opt to perform leak checks, nozzle/vane cleaning, and flow audits on a monthly basis, and this service interval is recommended by Met One whenever possible. Complete flow system maintenance typically requires less than 10 minutes to perform.

The best order for the monthly flow system checks is:

1. **As-found leak check.**
2. **Nozzle and vane cleaning.**
3. **As-left leak check.** (If a leak was corrected)
4. **Three-point flow check/audit and calibration if required.**

If an air leak is found in a BAM-1020 system, it is almost certain to occur at the interface between the nozzle and the filter tape due to debris buildup. There is normally an insignificant amount of leakage at the tape interface, but an excessive leak lets an unknown portion of the 16.7 L/min sample flow to enter the system at the leak point instead of the inlet. This could cause the total volume of air sampled through the inlet to be incorrect, and the resulting concentration data could be unpredictably biased. **The BAM-1020 has no way of automatically detecting a leak at the tape/nozzle interface because the airflow sensor is located downstream of the filter tape. Allowing a significant leak to persist may result in concentration data being invalidated!** Routine leak checks and nozzle cleaning prevent any significant leaks from forming. Performing an as-found leak check before cleaning the nozzle or performing any service is a key method for validating previous data.

Even if the leak check value is found to be within acceptable bounds, the nozzle and vane should still be cleaned anyway to ensure continued leak-free operation.

5.4 Leak Check Procedure

Perform the following steps to check for leaks in the BAM-1020 system:

1. Enter the TEST > TAPE menu on the BAM. This will stop the operation cycle of the unit. Press the FWD soft key to advance the tape 1 “window” to a clean, unused spot.
2. **(Optional)** Some users perform an as-found flow check/audit before performing any further service. If so, install your flow reference on the inlet, and check the 16.7 flow point in the TEST > FLOW screen. Record the as-found flow rate, but do not calibrate any of the flow parameters until the leak checks and nozzle cleaning are finished.
3. Remove the PM_{10} head from the inlet tube and install a BX-305 or equivalent leak test valve onto the inlet tube. If a $PM_{2.5}$ cyclone is used, install the leak check valve on top of the cyclone, since the cyclone is a possible source of leaks and should be tested. Turn the valve to the OFF position to prevent any air from entering the inlet tube.
4. Enter the TEST > PUMP menu and turn the pump on. The standard flow rate shown on the BAM display should stabilize at less than **1.0 L/min** in about 20 seconds.

Record the as-found results. If the leak flow value is greater than 1.0 L/min, then there may be a vary small amount of leakage in the system. If the leak value is greater than 1.5 L/min, then there may be a more significant leak.

5. If a leak is indicated, resolve it. First attempt the leak check again with the $PM_{2.5}$ cyclone removed (if used). Then clean the nozzle and vane as described below and perform the check again. When the leak is resolved and the leak check value is less then 1.0 L/min, record the as-left leak value.
6. Turn the pump off and remove the leak test valve. Go on to the nozzle and vane cleaning and the flow tests as described below.

Interpreting Leak Test Results:

- A properly functioning BAM-1020 with a clean nozzle and vane will often have a leak value well under the 1.0 L/min limit, such as about 0.5 L/min. The exact “best case” leak value for a particular unit varies depending on the type of pump used and the local altitude.
- The reason for the 1.0 L/min leak flow allowance is due to the test conditions. With the inlet closed, the vacuum in the system is many times greater than during normal sampling. If the leak flow during this test is less than 1.0 L/min, there cannot be a significant leak during normal operation.
- Some agencies choose to adopt tighter tolerances for the leak test criteria, such as requiring a leak value of 0.5 L/min or less after the nozzle and vane are cleaned.
- The typical threshold where data invalidation would be considered, is as-found leak values of greater than 1.5 L/min. Again, some agencies adopt tighter standards, such as invalidating all data back to the last known-good leak check, if the as-found leak value is greater than 1.0 L/min.
- The leak flow value may take a minute or two to stabilize if an inlet tube longer than 8 feet is used.

Advanced Leak Checks: If a leak is found which persists after the nozzle and vane are cleaned, then the source of the leak can be further isolated using a rubber shim, such as part 7440 supplied in the optional BX-308 tool kit. The filter tape can be removed and the shim inserted with the hole centered under the nozzle to eliminate the effects of leakage through the filter tape during the leak check. The shim can also be turned around and the solid side positioned under the nozzle in order to isolate leaks downstream of the vane. Troubleshooting Section 7.5 contains additional tips for resolving leaks in the flow system.

7440 Leak Isolation Shim

5.5 Nozzle and Vane Cleaning Procedure

The nozzle and tape support vane (located under the nozzle) must be cleaned regularly to prevent leaks. The cleaning must be done at least when the filter tape is changed, though monthly cleaning is highly recommended. Some sites will require more frequent cleaning as determined by the site administrator. The worst environment for debris buildup seems to be in humid, hot areas, because the filter tape fibers more easily adhere to the nozzle and vane. The fibers can build up and dry out into a hard mass which can create flow leaks or punch small holes in the filter tape. This can cause measurement errors. Use the following steps to clean the nozzle and vane parts:

1. Latch up the tape pinch rollers, and raise the nozzle in the TEST > PUMP menu. Slide the filter tape out of the slot in the beta block nozzle area. It is not necessary to completely remove the filter tape from the unit.
2. With the nozzle up, use a small flashlight to inspect the vane. Any debris will usually be visible. Clean the vane surface with a cotton-tipped applicator and isopropyl alcohol. Hardened deposits may have to be carefully scraped off with the wooden end of the applicator. Take care not to damage the vane!
3. Lower the nozzle in the TEST > PUMP menu. Lift the nozzle with your finger and insert another wet cotton applicator between the nozzle and the vane. Let the nozzle press down onto the swab with it’s spring pressure. Use your thumb to rotate the nozzle while keeping the swab in place. A few rotations should clean the nozzle lip.
4. Repeat the nozzle cleaning until the swabs come out clean, then inspect the nozzle lip and vane again, looking for any burrs which may cause tape damage.

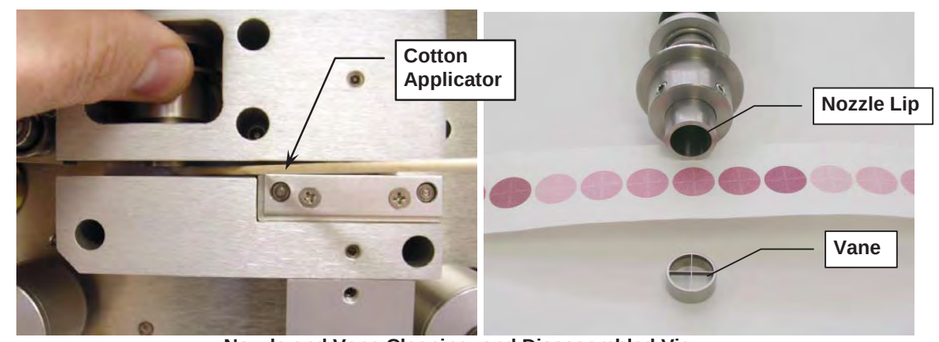

Nozzle and Vane Cleaning, and Disassembled View

The figure below shows the difference between good and bad filter tape spots. The tape on the left is from a properly operated BAM-1020 with a clean nozzle and vane. The dust spots have crisp edges, are perfectly round, and are evenly distributed.

The tape on the right is from a unit which has a leak. A spot of debris has built up on the vane, and is punching a pin-hole at the edge of each spot. These holes can allow beta particles to get through un-attenuated which negatively affects accuracy. The spots also show a “halo” effect due to air leaking in around the edge because the nozzle is not sealing correctly. These faults are easily corrected and prevented by keeping the nozzle and vane clean.

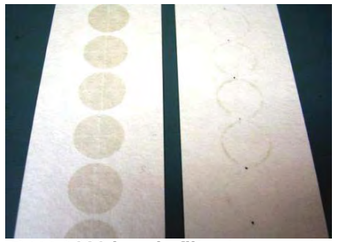

BAM-1020 hourly filter tape spots

5.6 Field Calibration of the Flow System – Actual Flow Mode

Flow calibrations, checks, or audits on any BAM-1020 set for actual flow control are very fast and easy. An ambient temperature sensor must be connected to input channel 6. The FLOW TYPE setting must be set to ACTUAL in the SETUP > CALIBRATE menu, or the flow calibration screen will not even appear as an option in the TEST menu. Perform a leak check and nozzle cleaning before doing any flow calibrations.

The TEST > FLOW calibration screen is shown below. The “BAM” column displays what the BAM-1020 measures for each parameter. The “STD” column is where you can enter the correct values from your traceable reference standard device. The <CAL> symbol appears to the left of row of the active selected parameter. The selected parameter can be changed by pressing the NEXT key. No calibration changes are made to the selected parameter unless the CAL or DEFAULT key is pressed. The ambient temperature and pressure are always calibrated before the flow, because the BAM uses these parameters to calculate the air flow rate in actual mode.

```
MULTIPOINT FLOW CALIBRATION
            TARGET    BAM      STD
        AT:           23.8    23.8 C
        BP:            760     760 mmHg
<CAL> FLOW 1: 15.0    15.0    15.0 LPM
      FLOW 2: 18.4    18.4    18.4 LPM
      FLOW 3: 16.7    16.7    16.7 LPM
  CAL      NEXT      DEFAULT    EXIT
```

Actual Flow Calibration Screen

1. Enter the TEST > FLOW menu as shown above. The nozzle will lower automatically when this screen is entered.
2. (Optional Audit Only) To perform a simple flow “check” or “audit” in which no BAM calibrations are to be changed, simply use the NEXT soft key to select the AT (temperature), BP (pressure), and FLOW 3 (16.7) parameters one at a time. Compare the BAM column reading to your standard device for each parameter, and record the results. No calibrations are altered if the CAL or DEFAULT keys are not pressed. If calibration is required, go on to step 3.
3. Select the AT parameter if not already selected. Measure the ambient temperature with your reference standard device positioned near the BAM-1020 ambient temperature probe. Enter the value from your reference standard into the STD field using the arrow keys. Press the CAL soft key to calibrate the BAM reading. The BAM and STD temperature values should now be the same.
4. Press the NEXT key to select the BP field. Enter the barometric pressure value from your reference standard into the STD field, and press the CAL soft key to calibrate the BAM reading. The BAM and STD pressure values should now be the same.
5. After the temperature and pressure readings are both correct, remove the PM_{10} head from the inlet tube and install your reference flow meter onto the inlet in it’s place. Press the NEXT key to select the first flow point of 15.0 L/min. The pump will turn on automatically. *Allow the unit to regulate the flow until the BAM reading stabilizes at the target flow rate*. Enter the flow value from your standard device into the STD field

using the arrow keys, then press the CAL soft key. Note: *The BAM flow reading will not change to match the STD until after you have entered all three flow calibration points, since it is done on a slope.*

6. Press the NEXT key to select the second flow point of 18.4 L/min. Allow the flow to stabilize again, then enter the value from your standard device and press the CAL key. Note: If the BAM-1020 is unable to achieve flow regulation at the 18.4 L/min point, this could be an early indication that the vacuum pump needs to be serviced.
7. Press the NEXT key to select the third flow point of 16.7 L/min. Allow the flow to stabilize again, then enter the value from your standard device and press the CAL key.
8. After this third flow point is calibrated, the BAM flow reading will change to show the corrected flow, then the BAM-1020 will quickly re-regulate the flow to 16.7 L/min based on the new calibration. The BAM-1020 flow reading should now match your flow standard device at 16.7 ± 0.1 L/min. Exit the calibration menu.

Resetting Flow Calibrations:
If the BAM-1020 flow, temperature, or pressure readings do not correctly change to match your standard device during the above calibration process, or if multiple calibrations are required in order to get a good match, then the BAM flow calibrations may need to be reset. This case has sometimes been observed during the first flow calibration after a BAM-1020 firmware update.

Select a parameter and press the DEFAULT soft key to clear out all previous calibration factors from that parameter and replace them with the original factory calibration factor. Default all of the AT, BP, and flow parameters, then try again to calibrate them to your standards. You may also need to reset the filter RH and filter temperature sensor calibrations. The default factory calibration factors should be very close to the correct values.

Actual flow calibrations in units with older firmware:
BAM-1020 units with firmware revisions 2.58 and earlier had a different TEST > FLOW screen, as shown below. These units are calibrated as described above, except that the flow calibration is performed at only a single point of 16.7 L/min. The NEXT key selects the AT or BP parameter to be calibrated, and the PUMP ON key selects the flow point for calibration. The ADJUST/SAVE key calibrates the selected parameter to the reference value.

```
      ACTUAL FLOW CALIBRATION MODE
F1= RESTORE DEFAULT
                        BAM       REFERENCE
AMBIENT TEMPERATURE:   23.8 C     23.4 C
BAROMETRIC PRESSURE:   741 mmHg  742 mmHg
VOLUMETRIC FLOWRATE:   16.7 lpm  16.9 lpm

ADJUST/SAVE   NEXT     PUMP ON    EXIT
```

Old Format of the Actual Flow Calibration Screen

5.7 Field Calibration of the Flow System – Standard Flow Mode

All BAM-1020 units configured for $PM_{2.5}$ and almost all units configured for PM_{10} with firmware 3.0 and later, are set with a FLOW TYPE of ACTUAL, and must be calibrated as described above in Section 5.6. If the unit must be operated in standard flow mode, see below.

STANDARD Flow BAMs with a Temperature Sensor:
If the BAM-1020 is an older PM_{10} unit without a separate CONC TYPE setting, or if the operational FLOW TYPE must be set to STANDARD for some special reason, then *the easiest way to calibrate the flow is to temporarily change the FLOW TYPE from STD to ACTUAL in the SETUP > CALIBRATE menu, then perform a normal actual flow audit or calibration as described above*. If this method is used, be sure to set the unit back to STD flow type when finished. This works as long as the BAM is equipped with an ambient temperature sensor on input channel six.

STANDARD Flow BAMs without a Temperature Sensor:
If the BAM-1020 is an old type and does not even have a temperature sensor, then you will not have any access to actual flow mode or the TEST > FLOW calibration screen. In this rare case, you will only be able to audit the BAM standard flow rate from the TEST > PUMP screen, and compare it to the standard flow reading from your audit device. If the BAM flow is found to be out of the ±4% spec, then it can only be adjusted by altering the factory-set $\mathbf{C_v}$ and $\mathbf{Q_0}$ flow constant values in the SETUP > CALIBRATE menu. Contact technical service for instructions. BAM-1020 units have not been supplied in this configuration without a temperature sensor for some years.

5.8 Field Calibration of the Flow System – Manual Flow Valve

Metered flow type is only used on some early PM_{10} BAM-1020s have a hand-operated manual flow valve on the back. Because these units do not have an automatic flow controller or a temperature sensor, the flow system has limited accuracy, and the calibration procedure is complicated and time-consuming. For this reason, manual flow configurations have not been supplied by Met One for some years. Current production units all have a flow controller and temperature sensor.

The audit process for these old units involved comparing the standard BAM flow reading from the TEST > PUMP screen to the standard flow reading from your audit device. The calibration procedure involves altering the factory-set $\mathbf{C_v}$ and $\mathbf{Q_0}$ flow constant values in the SETUP > CALIBRATE menu so that the BAM matched your standard, then calculating and adjusting the manual valve to an inconsistent higher flow point to account for filter loading and the volumetric cut-point of the inlet head. Met One has a separate, detailed technical bulletin which describes the flow calibration of these old units without an automatic flow controller.

6 SETUP MENU DESCRIPTIONS

The BAM-1020 uses a comprehensive system of setup menus which contain all of the settings and parameters needed to perform the measurement and operation of the unit. Most of these settings are set at factory default values which will be correct for most applications. Some settings may be altered by the operator to suit the specific needs of your monitoring program. This section describes the SETUP menu in detail, and should be reviewed when the instrument is put into service to ensure desired operation. Once set, most of the values in the SETUP menus will not need to be changed by the site operator. The SETUP values will not be lost if the unit is unplugged or powered down.

WARNING: Some of the settings in the SETUP menus are unit-specific calibration constants which must not be changed, or the accuracy and proper operation of the unit may be affected.

WARNING: Entering the SETUP menu system requires stopping the sample cycle. Older versions of firmware will not warn you before stopping the sample!

Press the SETUP soft-key to enter the menu as shown below. The Setup Menu provides a choice of operations. Use the arrow keys to navigate to the desired field, then press the SELECT soft-key to enter.

```
                    SETUP MODE SELECT
CLOCK     SAMPLE    CALIBRATE EXTRA1
ERRORS    PASSWORD  INTERFACE SENSOR
HEATER    QUERY     REPORTS

SELECT                          EXIT
```

The SETUP Menu

A brief description of each sub-menu in shown in the table below. Detailed information is provided in the following sub-sections.

Menu	Settings
CLOCK	BAM-1020 real-time clock date and time settings.
SAMPLE	Range, Offset, Sample Time, Count Time, Conc Units, Avg Period, Unit ID, and RS-232 settings.
CALIBRATE	Factory Calibration Values, (C_v, Q_0, ABS, µsw, K, BKGD) Flow rate, Flow type, Conc Type.
EXTRA1	Low concentration clamp, e1 – e4, Rarely used.
ERRORS	Analog error selections, Flow limits, Pressure drop limit.
PASSWORD	Password change screen.
INTERFACE	Cycle Mode early/standard, alarm relay polarity.
SENSOR	Meteorological sensor scaling and configuration screens, Channels 1 – 6.
HEATER	RH and Delta-T set-points for Smart Heater. Only visible if Heater Control is set to AUTO.
QUERY	Configuration for the custom Query data output file, and the European Bayern-Hessen protocol.
REPORTS	Daily data report hours.

6.1 CLOCK Setup Screen

The SETUP > CLOCK screen allows for the setting of the time and date. Time is a 24-hour clock only. Use the arrow keys to select and increment/decrement the desired field, then press the SAVE soft-key. The BAM-1020 clock may drift as much as a minute or two per month. The lithium battery backup keeps the clock running during power-down. Met One recommends checking the clock monthly to ensure correct sample timing.

6.2 SAMPLE Setup Screen – Range, Sample, and Timing Settings

The SETUP > SAMPLE screen is used to set the BAM-1020 sampling and averaging periods, and some other important settings. Review each of these settings carefully. The SAMPLE screen is shown below. The fields can be edited with the arrow keys, then saved with the SAVE soft-key.

```
                              SETUP SAMPLE
RS232 9600 8N1    BAM SAMPLE 042 MIN

STATION # 001     MET SAMPLE  60 MIN
RANGE   1.000 mg  OFFSET  -0.015 mg
CONC UNITS mg/m3  COUNT TIME   8 MIN
  SAVE                         EXIT
```

The SETUP > SAMPLE Screen

RS-232: This allows you to set the baud rate of the RS-232 serial port. The available values are 300, 600, 1200, 2400, 4800, 9600, 19200, and 38400 baud. The default setting is 9600 baud. The BAM-1020 must be set to 9600 baud during flash firmware upgrades, but may be set faster for data collection. The handshaking settings “8N1” means 8 data bits, no parity, 1 stop bit. These cannot be edited.

BAM SAMPLE: This value sets the amount of minutes per sample hour that the vacuum pump is ON. See Section 4.1 for a description of the hourly cycle. The BAM SAMPLE time must be set in response to the COUNT TIME value, since current versions of the BAM-1020 allow the option of setting the count time to 4 or 8 minutes. *If the unit is used for $PM_{2.5}$ FEM or EU $PM_{2.5}$ monitoring, the BAM SAMPLE must be set to 42 minutes with 8-minute count time.* PM_{10} monitors are usually set for 50 minute sample time with 4 minute count time, but may be set for 42/8 if the firmware allows the count time to be set to 8 minutes.

Count Time	BAM Sample	Used for
4 min	**50 min**	PM_{10} monitoring, units without a count time setting
6 min	46 min	not used
8 min	**42 min**	All $PM_{2.5}$ FEM, PM-coarse, EU $PM_{2.5}$ monitoring

The BAM SAMPLE setting has a range of 0-200 minutes for custom applications. If set for shorter period, such as 15 minutes, the pump will only sample for 15 minutes and then wait

until the end of the hour before beginning a new cycle. This may not leave time for the membrane span check. Only one pump cycle per hour is allowed, regardless of duration. Setting the BAM SAMPLE value too long may cause the total measurement cycle to overlap into the next hour, so that the unit only collects the concentration every second hour. This is usually undesirable. Contact the Service department before setting this to anything but 42 or 50 minutes.

STATION #: This is a station identification number. This number has a range of 001-254, and will be included in the data reports. When used in a network, every BAM-1020 should be given a different station number. Default value is 01. Previous firmware revisions allowed a max value of 99.

MET SAMPLE: This value is the averaging period for the built-in met sensor data logger. It sets how often the data array is averaged and written to memory, and can be set to 1,5,15, or 60 minutes. For example, if an optional wind speed sensor is attached to the BAM, the MET SAMPLE period could be set to 1 or 5 minutes. This value applies to all parameters and sensors attached to the unit, except for the dust concentration data which is always an hourly average regardless of this setting.

Warning: This setting will affect how long the memory will last before getting full! There are **4369 records** available in the BAM memory. The default MET SAMPLE period of 60 minutes (1 record per hour) will result in 182 days worth of memory capacity, but a 1 minute average period would fill up these memory records in only 3 days. When the memory gets full the unit over-writes the oldest data. Leave the MET SAMPLE period set at the default value of 60 minutes unless a faster average is required for a particular met sensor application.

MET SAMPLE	Data Capacity
60 min	182 days
15 min	45 days
5 min	15 days
1 min	3 days

RANGE: The RANGE setting sets the full-scale range of the concentration measurement system, including the digital system and the analog voltage output. The RANGE value is rarely ever changed from the default setting of 1.000 mg, with a default OFFSET (lower limit of the range) of -0.015 mg. This means that the BAM measures a maximum full-scale range of -0.015 mg + 1.000 mg = 0.985 mg by default. The table below shows some examples of how the RANGE and OFFSET setting interact to produce the concentration data outputs.

OFFSET Setting	RANGE Setting	Resulting Digital Data Range	Resulting Analog Output Range
-0.015 mg	1.000 mg	-0.015 to 0.985 mg	0-1V = -0.015 to 0.985 mg
-0.005 mg	1.000 mg	-0.005 to 0.995 mg	0-1V = -0.005 to 0.995 mg
-0.015 mg	0.200 mg	-0.015 to 0.185 mg	0-1V = -0.015 to 0.185 mg
0.000 mg	1.000 mg	0.000 to 1.000 mg	0-1V = 0.000 to 1.000 mg
-0.015 mg	2.000 mg	-0.015 to 1.985 mg	0-1V = -0.015 to 1.985 mg

In special cases, the RANGE value may be set to 0.100, 0.200, 0.250, 0.500, 2.000, 5.000, or 10.000 mg. *It is absolutely critical to understand this setting if an external datalogger is used to log the BAM-1020 analog output, since the data logger must be set to scale the analog voltage correctly. See Section 8*. The only reason to ever set the RANGE to a lower value such as 0.200 mg, would be to improve the resolution of the analog output if you are sure the concentrations will never exceed 200 micrograms. This is because the 0-1 volt output has a ±.001 volt tolerance, which can introduce up to a 1 microgram error if the RANGE is set to 1.000 mg, but only a 0.2 microgram error if the RANGE is set to 0.200 mg.

High Concentrations: The RANGE setting may be set higher than 1.000 mg in high concentration areas. It is very unlikely that $PM_{2.5}$ levels will exceed 1000 µg without first clogging the BAM filter tape, but some PM_{10} areas can see dust loading that exceeds 1000 µg without clogging the tape spot. *However, setting the RANGE to 5.000 or 10.000 mg reduces the digital resolution of the BAM-1020 in low concentrations, so don't use these two range settings unless necessary.*

Note: Changing the range setting will affect past data already stored to memory. Always download any old data before changing settings, then clear the memory. Firmware version 3.2.4 or later will require you to clear the memory before letting you change this setting.

OFFSET: The OFFSET value is used to set the lower end of the BAM-1020 measurement range, and could more accurately be called a "range offset". The factory default value for OFFSET is -0.015 mg. This shifts the range of the BAM-1020 down slightly so that it can read from -0.015 to 0.985 mg (with the default range of 1.000 mg). This simply allows the unit to measure slightly negative concentration numbers near zero, which is necessary to differentiate between normal noise and a failure such as punctured filter tape.

The default OFFSET on older units was -0.005 mg, and the value may still be set to -0.005 to work with data logging systems structured around the old setting. Some BAM users set the OFFSET value to 0.000 to avoid confusion, but this is never recommended, because it will not allow you to see the true zero noise floor of the unit during the zero filter test, and it can cause an artificial positive bias in low concentration $PM_{2.5}$ monitoring.

This value also affects the analog output, so that 0 to 1.000 volts equals -0.015 to 0.985 mg, instead of 0.000 to 1.000 mg. This is because the voltage output cannot go negative. You must take this scaling into account if an external data logger is recording the BAM-1020 analog output voltage. Do not set the OFFSET to any value other than -0.015, or -0.005 mg.

Note: The OFFSET value is often misunderstood, and should not be confused with the BKGD (zero correction factor) or the "e1" (lower concentration limit clamp) values. Be sure you understand all three of these settings!

Note: Changing the offset setting will affect past data already stored to memory. Always download any old data before changing settings, then clear the memory. Firmware version 3.2.4 or later will require you to clear the memory before letting you change this setting.

CONC UNITS: This setting determines the concentration units which the BAM-1020 displays and stores in memory. This can be set to ug/m3 (micrograms) or mg/m3 (milligrams) per cubic meter. Older revisions of firmware were fixed at mg/m3 only, and this is still the default setting. **Note:** 1.000 mg = 1000 µg.

COUNT TIME: This is the amount of time the unit takes to perform the I_0 and I_3 counts at the beginning and the end of the sample hour. *When used for $PM_{2.5}$ FEM, EU $PM_{2.5}$, or $PM_{10-2.5}$ (coarse) monitoring, the COUNT TIME must be set to 8 minutes.*

Older revisions of the BAM-1020 firmware before Rev 3.2 were always fixed at 4 minute count times only, and some newer units (those sold for PM_{10} use only) are also fixed at 4 minutes. However, if the BAM is equipped with firmware which allows the 8-minute count time, it may be used for PM_{10} as well. See the BAM SAMPLE setting description above, and Section 4.1. The unit will prompt you to change the BAM SAMPLE time setting if you change the COUNT TIME to an incompatible value.

6.3 CALIBRATE Setup Screen – Critical Flow and Calibration Settings

The SETUP > CALIBRATE screen is where most of the factory-determined calibration parameters for the BAM-1020 are stored. These values are unit-specific, and can also be found on the calibration certificate for the BAM-1020. Most of these settings will never be changed without specific information from Met One Instruments. It is good practice to periodically audit the calibration values to verify that they have not been altered. The CALIBRATE screen is shown below.

```
CALIBRATE SETUP
SPAN CHECK: 24HR     FLOW RATE:  16.7
 CONC TYPE: ACTUAL   FLOW TYPE: ACTUAL
        Cv:  1.047          Qo:  0.000
       ABS:  0.822         µsw:  0.306
         K:  1.005        BKGD: -0.0030
  STD TEMP: 25C         HEATER: AUTO
  SAVE                        EXIT
```

The SETUP > CALIBRATE Screen

SPAN CHECK: This setting determines how often the BAM-1020 performs the automatic span membrane check. If the value is set to 1 HR, the BAM measures and displays the span each hour as normal. If this value is set to 24 HR, then the BAM will only perform the span check once during the sample hour beginning at midnight, or during any sample hour following a power failure. The resulting value will be displayed throughout the rest of the day. If this value is set to OFF, the span check will be disabled entirely. **Note:** This setting does not appear in any firmware before V3.7.0, where the setting is invisible and fixed at hourly.

FLOW RATE: This sets the air flow rate for the BAM-1020, and the unit will continuously regulate the flow to this value during sampling. The FLOW RATE is always set for **16.7 liters per minute**, as this is required for all $PM_{2.5}$ and PM_{10} monitoring. The only time this might be changed temporarily is if a site operator was testing the ability of the pump and flow controller to regulate the flow at different levels for troubleshooting purposes. The range of the setting is 10 to 20 L/min.

CONC TYPE: This sets the way that the concentration values are reported. *The CONC TYPE must be set to ACTUAL for all $PM_{2.5}$ monitoring, and is almost always set to STD for PM_{10} monitoring.* If set to ACTUAL, then the concentration is calculated and reported based on the volume of the air at local ambient conditions. An ambient temperature sensor is required. If set to STD, the concentration is calculated and reported based on the standard values for temperature and pressure (760 mmHg and usually 25C), even if a temperature sensor is available. See Section 5.2. Note: units with firmware prior to rev 3.0 do not have this setting available, and the concentration reporting is determined by the FLOW TYPE setting.

FLOW TYPE: This setting selects the flow control scheme used by the BAM-1020. The options are ACTUAL or STD. This is an important parameter to understand. At sea-level and moderate temperatures the difference between actual and standard flow will be minimal, but at high elevations or varied temperatures the flow rate can be greatly affected by this setting. **Section 5.2 contains a detailed description of each of these flow types**, and should be studied to ensure proper operation of the unit.

The FLOW TYPE must be set to ACTUAL on all $PM_{2.5}$ and $PM_{10-2.5}$ (coarse) units. The flow is controlled based on actual, local ambient temperature and pressure conditions. ACTUAL flow type is also recommended for all newer PM_{10} units with firmware revision 3.0 or later, since the separate CONC TYPE setting can be set to STD for standard PM_{10} reporting, even though the flow is controlled volumetrically. Actual flow requires an ambient temperature sensor.

If the FLOW TYPE is set to STD on a unit with revision 3.0 or later firmware, the BAM-1020 will control the flow based on standard temperature and pressure values, even if a temperature sensor is connected. This is rarely used because the inlet heads and cyclones are rated for actual cut-points. Older PM_{10} units with firmware 2.58 and earlier (which did not have a separate CONC TYPE setting) had the FLOW TYPE set to STD, which controlled both flow type and concentration reporting. However, if a temperature sensor was available, these older units automatically performed actual flow control.

Note: METERED flow type is obsolete, and was used for old BAM units with a manual flow valve. The flow was reported in EPA standard conditions only.

Cv: This value is a factory-set scaling slope for the internal mass flow sensor. The value of Cv is never altered except when performing a flow calibration on old units without an automatic flow controller. All newer units with flow controllers and ambient temperature sensors never need to have this value altered, because the flow calibrations are done in the TEST > FLOW screen.

Qo: This value is the factory-set zero correction offset for the internal mass flow sensor, and is almost always simply zero. Qo is usually never changed by the user except when troubleshooting a leak check failure if the BAM flow display does not drop to 0.0 L/min when the pump tubing is disconnected from the unit.

ABS: The ABS value is the factory-set expected mass of the reference membrane foil used during the automatic hourly span check. This expected value is compared to the measured value each hour (see section 4.2). Each unit's ABS value is different, but is typically near

0.800 mg/cm^2. **The ABS value is never changed by the operator unless the span membrane foil is replaced due to damage.**

µsw: This is called the Mu-switch value, and is the factory-set mass absorption coefficient used by the BAM-1020 in the concentration calculations. The value varies for different units, but is typically near 0.305. Older units built before 2007 had a µsw value near 0.285. **Warning: This is a unit-specific calibration value which may significantly affect the accuracy of the unit. Never change this value without specific instruction from Met One Instruments.**

K: The K-factor is the factory-set calibration slope correction (multiplier) for the BAM-1020 concentrations. The K-factor value is determined by dynamic testing of the BAM-1020 in the factory smoke chamber. This will always be a value between 0.9 to 1.1. All of the stored and displayed data contains this correction. **Warning: This is a unit-specific calibration value which may significantly affect the accuracy of the unit. Never change this value without specific instruction from Met One Instruments.**

BKGD: The BKGD (background) value is the zero correction (offset) for the BAM-1020 concentrations. This is determined by running the unit for at least 72 hours with a zero filter on the inlet. The concentration values over this time are averaged, and the BKGD is the negative of this average. All of the stored and displayed data contains this offset correction. The BKGD value is typically between 0.000 and -0.005 mg/m^3. Met One supplies the BAM-1020 units with a factory-set BKGD value. All $PM_{2.5}$ units are also supplied with a BX-302 zero filter kit which allows the user to audit the background value and set it for local conditions. **Warning: This is a calibration value which may significantly affect the accuracy of the unit.**

Note: The BKGD value is a true data offset, and is not to be confused with the OFFSET (range offset) value in the SETUP > SAMPLE menu. See section 6.2.

STD TEMP: This is the value of standard air temperature, used only for standard flow control or standard concentration calculations. In the U.S. the value of standard temperature is always 25 degrees C as mandated by the U.S. EPA. Some other countries use a standard temperature value of 0C or 20C. This setting is not available on units using firmware revision 2.58 and earlier, where the standard temperature was always fixed at 25C.

HEATER: This setting selects which operation mode the Smart Inlet Heater is used in. This value must be set to AUTO for all $PM_{2.5}$ PM_{10} and $PM_{10\text{-}2.5}$ monitoring. When set to AUTO, the Smart Heater can use the filter RH and/or temperature sensors to control the inlet tube heating. The setup parameters for the Smart Heater logic are located in the separate SETUP > HEATER menu, which will not appear as an option in the SETUP menu unless this HEATER mode is set to AUTO.

If set to MANUAL, the unit will simply turn the heater on to full power regardless of filter conditions. This mode is not used.

6.4 EXTRA1 Setup Screen

The settings in the EXTRA1 screen are special settings that have been installed for special applications and generally will never be changed.

e1 Low Concentration Limit. This is the lowest concentration value the BAM-1020 is allowed to store or display, despite what is measured. Any measurements below this value are clamped. **This value must always be set to match the OFFSET value in the SETUP > SAMPLE menu.** The default value is -0.015 mg.

e2 Not Used. Always set to 0.500.

e3 Membrane OFF Delay. Not used. Always set to 0.000.

e4 Membrane Time Out. The time the unit allows for the membrane assembly to move before generating an error. Always set to 15.00 seconds.

6.5 ERRORS Setup Screen for the Analog Output

The SETUP > ERRORS screen allows the option of encoding BAM-1020 errors onto the analog output signal when used with an external analog data logger. Using this method, the BAM sets the analog output voltage to full scale (1.000 volts) whenever any of the enabled error types occur, otherwise the voltage represents the last valid concentration level. See Section 8 for external data logger setup information.

The operator can select which errors will cause this full-scale response by enabling (1) or disabling (0) each of the 12 error types as shown in the screen below. Most users simply enable all 12 error types if the BAM-1020 analog output is used.

```
                    SETUP MODE ERROR
EUMILRNFPDCT AP  FRI FRh
111111111111 150 10  20
1=ON,  0=OFF
 SAVE                        EXIT
```

The ERRORS Screen

Note: Some minor alarms such as E, U, R, P, or D can occur when there may be nothing wrong with the hourly concentration value, yet these alarms are still typically enabled to set the analog output to full-scale in order to alert the data system of their presence. In this case, the concentration value can still be downloaded from the BAM digitally. Regardless which error types are enabled for the analog output, *all alarms and errors are always stored in the BAM-1020 digital alarm log and data log*, and may be viewed by downloading the data.

The following table briefly describes which type of alarm each letter represents. Complete error and alarm descriptions are found in Section 7.2.

Code	Error/Alarm Type	Basic Description
E	**External Reset**	Failed BAM clock reset.
U	**Telemetry Fault**	External datalogger fault.
M	**Maintenance Alarm**	Sample cycle stopped due to SETUP or TEST menu use.
I	**Internal CPU Error**	Internal processor error, or failed data link between coarse units.
L	**Power Failure**	Power failure prevented sample completion.
R	**Reference Membrane**	Reference span membrane not extending or retracting properly.
N	**Nozzle Error**	Nozzle motor malfunction.
F	**Flow Error**	Flow system failure, or temperature/pressure sensor failure.
P	**Pressure Drop Alarm**	Tape blocked by excessive dust loading.

D	**Deviant Span Density**	Span check did not match the expected ABS value.
C	**Count Error**	Beta particle detector error.
T	**Tape System Error**	Broken filter tape, or an error in the tape control system.

The following settings related to the alarms are located in the SETUP > ERRORS screen:

AP Pressure-drop limit. This is the maximum amount of increase in pressure drop which is allowed to occur at the filter tape due to heavy dust loading, before the “P” alarm will be generated. Setting the AP higher will allow more dust to accumulate before the sample is terminated, but may cause flow regulation problems. See the Pressure-drop alarm description in Section 7.2. The default setting of **150** mmHg is correct for most applications using the standard Medo or Gast pumps. Larger pumps can accommodate a higher AP setting and higher dust loads while still being able to regulate the sample flow. The setting range is 0-500 mmHg.

FRl Flow Rate Lower Limit. The default setting is 10 L/min. Do not change the setting, since this parameter is superseded by the current flow alarm criteria. See the flow alarm description in Section 7.2.

FRh Flow Rate Higher Limit. The default setting is 20 L/min. Do not change the setting, since this parameter is superseded by the current flow alarm criteria. See the flow alarm description in Section 7.2.

6.6 PASSWORD Setup Screen

The SETUP > PASSWORD screen allows the program administrator to change the password required to enter many of the TEST or SETUP menus. The password prevents untrained users from accidentally changing critical settings or calibrations on the unit. The password can be any 4-key combination of the six function keys, F1 to F6. The default password is **F1, F2, F3, F4**. Met One does not recommend changing the default password unless necessary. Contact the Met One Service department for instructions if the password is lost or forgotten.

6.7 INTERFACE Setup Screen

The SETUP > INTERFACE screen is shown below. These settings are used to configure the BAM-1020 for operation with an external data logger recording the analog output. Most of these settings are rarely used.

```
                         Interface Setup

Cycle Mode: STANDARD Force Maint: OFF
Fault Polarity: NORM Split DELTAP: 00300
Reset Polarity: NORM


  SAVE                            EXIT
```

The INTERFACE screen

Cycle Mode: The Cycle Mode can be set to STANDARD or EARLY. If you are not using the analog output voltage of the BAM-1020, leave this set to STANDARD. The Cycle

Mode setting must be reviewed and understood if the analog output is being used. See Section 8.2.

Force Maint: This can be used to manually toggle the “M” digital maintenance flag and the maintenance relay on the back of the unit ON or OFF. Almost never used.

Fault Polarity: This sets the polarity of the Telemetry Fault Relay input. NORM is normally open, INV is normally closed. Almost never used.

Split DELTAP: Not used.

Reset Polarity: This tells the BAM-1020 the incoming polarity of an external clock reset signal, if used. This signal is used to synchronize the BAM clock to an external data logger. NORM is normally open, INV is normally closed. Almost all data loggers use normal open polarity for the signal.

6.8 SENSOR Setup Screen for External Met Sensors

The SETUP > SENSOR menu is where configurations and setup parameters are located for the six analog input channels used to log external meteorological sensors. Each channel must be configured to accept the sensor before data can be acquired. Description for the parameters are provided below. There is a separate configurable setup screen for each of the six external sensor inputs in the SETUP > SENSOR menu. There are also two internal channels (I1 concentration and I2 flow volume) which can be viewed but not modified.

Met One BX-500 series meteorological sensors have an Auto ID feature which allows the BAM to automatically recognize the sensor and enter all of the setup parameters for any channel the sensor is attached to. The six channels can also be manually configured for other sensors. Almost any meteorological sensor with a voltage output range of 1.0 or 2.5 volts can be scaled and logged by the BAM-1020.

```
                        SETUP CHAN PARAMS

CH    TYPE  UNITS  PREC  MULT  OFFSET
06    AT    C       1  0100.0  -050.0
       SENSOR FS VOLT:  1.000
INV SLOPE:N VECT/SCALAR:S MODE:AUTO ID

  SAVE              ID MODE      EXIT
```

The SENSOR Menu

CH: Selects the channel to be viewed. The up/down arrow keys select the channel.

TYPE: This is the parameter name. You can enter a name here by using the arrow keys to scroll through the alphabet and other ASCII characters.

UNITS: This is the measurement units label for the channel. You can enter a value here by using the arrow keys to scroll through the alphabet and other characters.

PREC: This is the precision field, which sets the number of available decimal places for the Multiplier and Offset parameters.

MULT: This is really the measurement range or the span of the sensor. If a baro sensor has a range of 525 to 825 mmHg, then the MULT would be 300 (mmHg). If a RH sensor has a range of 0 to 100%, then the MULT would simply be 100 (%).

OFFSET: This is the range offset value, or the measurement value that the sensor represents at 0.000V output. In the screen shown above, the AT sensor has a 0-1V output representing -50 to +50C. So the MULT range is 100 (C) and the offset is -50, because 0.000V from the sensor represents -50C.

FS VOLT: This is the full-scale voltage output of the sensor. The maximum voltage range that can be supplied by the sensor. This value is usually going to be either 1.000 or 2.500 volts. 2.500 is the maximum setting for this field.

INV SLOPE: This setting allows the channel to recognize a sensor with an inverse slope. This is always set to **N** (no) except for use with thermistor temperature sensors with resistance-only outputs.

VECT/SCALAR: This value sets the averaging method. **S** (scalar) is used for all measurements except wind direction, which uses **V** (vector).

MODE: This field is toggled by pressing the ID MODE soft-key. The value can be set to either MANUAL or AUTO ID. In MANUAL mode, the user can enter their own setup parameters for the channel. AUTO ID mode is used with 500 series sensors, and must be selected in order for the unit to recognize the sensor automatically. **NOTE:** Any manually set parameters for that channel will be lost when changing to AUTO ID mode. **Channel 6 must be set to AUTO ID for all units equipped with an ambient temperature sensor.**

6.9 HEATER Setup Screen – RH Control Settings

The SETUP > HEATER screen is only visible if the HEATER CONTROL mode in the SETUP > CALIBRATE menu is set to AUTO. This menu is used to configure the settings used by the BAM-1020 to control the Smart Inlet Heater. The BAM uses an RH and temperature sensor located below the filter tape in the sample air stream to monitor the conditions of the air as it is being sampled. If the sample relative humidity is excessive (above about 50%), the particulate on the filter tape can begin to absorb moisture and the measured mass will increase. The effect gets worse as the sample RH increases. The Smart Heater minimizes this effect by actively heating the inlet tube to lower the humidity.

```
Heater Setup
          RH Control:  YES
         RH Setpoint:  35%
          Datalog RH:  YES (Chan 4)
     Delta-T Control:  NO
    Delta-T Setpoint:  99 C
     Datalog Delta-T:  NO (Chan 5)
  SAVE                          EXIT
```

The SETUP > HEATER Screen

RH Control: This must be set to YES for most applications. If YES is selected, the Smart Heater will be automatically turned on full power whenever the humidity of the sample

stream exceeds the RH Setpoint (usually 35%). When the RH falls back below the set point, the heater turns down to a low power heat mode which simulates the older style wrap-around heaters. If this is set to NO, The Smart Heater will stay in low power mode and no additional RH control will be performed.

RH Setpoint: This is the relative humidity level that the filter will be regulated at or below by the inlet heater. This value must be set to **35%** for all $PM_{2.5}$ FEM units. The value is set to 45% for European $PM_{2.5}$ units, and may be either 35% or 45% for PM_{10} units. The RH Setpoint can be set from 10% to 99% for special applications only.

Datalog RH: If YES is selected, the filter RH values will be logged on channel 4 of the BAM-1020. Select YES if you do not have any external sensors attached to channel 4.

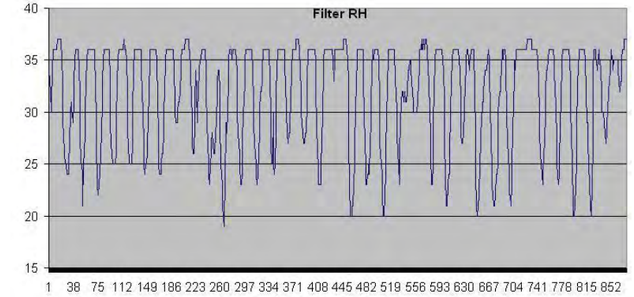

Properly Regulated Channel 4 Hourly Filter RH Graph

Delta-T Control: Delta-T Control is not used except in special study applications, and must be set to NO for all $PM_{2.5}$ FEM monitoring. The filter temperature on the BAM is always higher than ambient temperature due to the inlet heater. The BAM can calculate the Delta-T (temperature difference) if an ambient temperature sensor is connected. If Delta-T Control is set to YES, the Smart Heater will turn down to low power mode whenever the Delta-T Setpoint is exceeded, regardless of the filter RH.

Volatile organic compounds (VOCs) may be lost from the sample if the filter temperature is excessive. However, the BAM-1020 changes the filter spot every hour, and the classic 5 degree C filter Delta-T limit does not apply to the BAM-1020. In cold climates, the BAM-1020 Delta-T values can be very large. Excessive filter RH has a far greater adverse effect on the concentration measurement than filter temperature.

Delta-T Setpoint: Only used if Delta-T Control is enabled. This can be set from 1 to 99 degrees C. If the Delta-T exceeds this setpoint, the Smart Heater will turn down to low power mode, regardless of the RH level. An “N” alarm is logged any time this happens. Note: There is often a few degrees of Delta-T measured even if the heater is OFF, due to mild heating effect of the unit itself. Frequent errors will be logged if the setpoint is too low. Set this value to at least 8 or 10 degrees C if used. Set the value to 99 if Delta-T control is not used.

Datalog Delta-T: If YES is selected, the Delta-T values will be logged on met channel 5 of the BAM-1020, as long as no other external sensors are attached to channel 5. Note: *The measured Delta-T values may still be logged even if Delta-T control is set to NO*. Many BAM-1020 users log the Delta-T for informational purposes.

6.10 QUERY Setup Screen – Custom Data Array Setup

The SETUP > QUERY screen allows the user to configure a custom digital data array for the new Query Output, or for the European BH Bayern-Hessen protocol. The user can select exactly which data parameters appear in the array, and in what exact order they appear. The custom array can be as simple as a single concentration value, or it can be very comprehensive including some parameters that are not even available in any of the standard data files, such as the hourly span membrane check value. The setup of this custom array does not affect any of the standard BAM data arrays. The query output is available in firmware revisions 3.6.3 and later and requires the Report Processor. The BH protocol is available in revision 5 series European firmware. A separate technical document for the Bayern-Hessen protocol functions is also available. See Section 9.9 for instructions about how to retrieve the Query output files.

```
N:08                    DATA QUERY FIELDS
 01 TIME      02 CONC      03 FLOW
 04 AT        05 BP        06 RH
 07 REF       08 ERRORS    09
 10           11           12
 13           14           15
 16           17
   SAVE                          EXIT
```

The SETUP > QUERY Screen

The **N:** field sets how many values to include in the array. Up to 17 parameters can be included. Increment the N value with the up/down arrow keys. For each increment of the N value, another position in the array will be activated, starting with position 01.

Each position in the array can be changed to any desired parameter using the left/right keys to select the position, and the up/down keys to scroll through the whole list of parameters. In the example above, eight parameters are included and the shown parameters were selected for each of the eight positions in the array. The available parameters are listed in the table below:

Parameter	Description
CONC	Concentration value for the last sample period.
Q_STD	Sample flow volume in cubic meters at standard conditions.
Q_ACT	Sample flow volume in cubic meters at actual AT/BP conditions.
STAB	Stability measurement. Diagnostics use only. EU firmware only.
REF	Reference span membrane mass measurement in mg/cm2.
FLOW	Real time flow or average flow for the last sample.
CV	Flow coefficient of variability for the last sample period. (Standard deviation divided by the mean)
AT	Average ambient temperature for the sample period.
BP	Average barometric pressure for the sample period.
ANALOG 1	Average of analog met sensor channel 1 (user defined channel).
ANALOG 2	Average of analog met sensor channel 2 (user defined channel).
ANALOG 3	Average of analog met sensor channel 3 (user defined channel).
ANALOG 4	Average of analog met sensor channel 4 (usually filter RH).
ANALOG 5	Average of analog met sensor channel 5 (user defined channel).
ANALOG 6	Average of analog met sensor channel 6 (almost always AT).
PM10s	PM10 concentration using standard conditions. Used in PM-coarse systems where the coarse PM10 value is in actual conditions, but the standard PM10 value is also needed for regular PM10 reporting requirements. This parameter is only available in the PM10 master unit of a coarse set
PM2.5	PM2.5 concentration from the slave unit in a PM-coarse. This parameter is only available in the master unit of a coarse set.
PMc	PM-coarse (PM10 - PM2.5) concentration value. This parameter is only available in the master unit of a coarse set.
TIME	Date and Time stamp for the sample period. Ignored for BH protocol.
ERRORS	Decimal error codes of the 12 major error categories.

6.11 REPORTS Setup Screen – Daily Data Range

The SETUP > Reports screen is used to select which hours are included in the daily BAM-1020 data file reports. The two possible choices are:

00:00 to 23:00 (old default setting) or **01:00 to 24:00** (correct newer setting)

The BAM-1020 time stamp is the end of the sample hour, not the beginning, so the 01:00 data point is for air sampled between midnight and 1:00 am. Always select 01:00 to 24:00. The 00:00 to 23:00 setting is only included for a couple of agencies who have a data collection system built around the old setting.

7 MAINTENANCE, DIAGNOSTICS and TROUBLESHOOTING

This section provides information about routine maintenance, identifying errors and alarms, and performing diagnostic tests if a problem is encountered on the BAM-1020. The TEST menu functions are also described in this section.

Met One Instruments also publishes a comprehensive array of technical bulletins that cover advanced information about less-common subsystem troubleshooting, upgrades, and repairs that are too detailed to be included in this manual. These are available in the “BAM Users” section of our website, or by e-mail request from the Technical Service department.

7.1 Met One Recommended Periodic Maintenance Table

The following table shows the recommended interval for the regular BAM-1020 maintenance, field check, and service tasks. Special tools are not required for any of the routine BAM service tasks on less than yearly intervals. Met One recommends the BX-308 and BX-344 kits for non-routine service and repairs such as nozzle removal and detector tests. Complete instructions are included.

Maintenance Item	Period
Nozzle and vane cleaning.	**Monthly**
Leak check.	**Monthly**
Flow system check/audit.	**Monthly**
Clean capstan shaft and pinch roller tires.	**Monthly**
Clean PM10 inlet particle trap and PM2.5 cyclone particle trap.	**Monthly**
Download and save digital data log and error log.	**Monthly**
Compare BAM-1020 digital data to external analog datalogger data, if used.	**Monthly**
Check or set BAM real-time clock.	**Monthly**
Replace filter tape roll.	**2 Months**
Run the SELF-TEST function in the TAPE menu.	**2 Months**
Download and verify BAM-1020 settings file.	**Quarterly**
Complete flow system calibration.	**Quarterly**
Completely disassemble and clean PM10 inlet and PM2.5 cyclone.	**Quarterly**
Replace or clean pump muffler.	**6 months**
Test filter RH and filter temperature sensors.	**6 months**
Test smart heater function.	**6 months**
Perform 72 hour BKGD test (BX-302 zero filter).	**12 months**
Clean internal debris filter.	**12 Months**
Remove and check membrane span foil.	**12 Months**
Beta detector count rate and dark count test.	**12 Months**
Clean vertical inlet tube (BX-344 cleaning kit).	**12 months**
Test analog DAC output, if used.	**12 Months**
Replace lithium battery if necessary.	**12 Months**
Rebuild vacuum pump.	**24 months**
Replace nozzle o-ring.	**24 months**
Replace pump tubing, if necessary.	**24 Months**
Factory recalibration is not required except for units sent for major repairs.	**---**

7.2 BAM-1020 Error and Alarm Descriptions

The following table describes the BAM-1020 error and alarm codes. Errors are grouped into twelve categories. If an error or alarm occurs, it will appear at the end of the hourly digital data array as a simple “1” bit in one of the twelve error bit positions. This allows data collection systems to easily identify errors. See Section 9 for data examples. Errors and alarms are also stored in the separate BAM digital error log file, which contains more detail about the specific sub-category cause of the alarm.

Note: *In general, any error which prevents the BAM-1020 from making a valid, accurate hourly concentration measurement will also cause the digital concentration value to be stored as a full-scale value (usually 0.985 mg) in order to indicate invalid data.* In most cases, critical errors will also force the analog output to full-scale (1.00V). The rules for which errors cause invalid data and full-scale values have varied slightly with past revisions of firmware. The following descriptions explain these conditions in as much detail as possible. If an error occurs in your unit which does not seem to agree with this description, please note your firmware revision and contact Technical Service.

Code	Error/Alarm Type	Error/Alarm Description
E	**External Reset or Interface Reset**	This alarm indicates that an external datalogger sent a clock synchronization signal to the BAM on the EXT RESET input, but the BAM was unable to reset it’s clock, because it occurred outside of the allowable time window. Hourly clock reset signals will be ignored by the BAM from minutes 5-54 (standard cycle) or minutes 0-49 (early mode). See Section 8.2.The alarm will also be generated if the synch signal occurs within the acceptable window near the end of the hour, but before the BAM has finished the previous concentration calculation. The digital error log will indicate which of these two has conditions occurred. If an external clock reset event is successful, then no alarm is logged. These alarms do not prevent the BAM from storing a valid data record for the sample hour. Manually set the BAM-1020 clock to match the datalogger clock initially. This should cause subsequent clock synch events to succeed. Make sure the BAM lithium battery is functional.
U	**Telemetry Fault or Interface Fault**	This alarm indicates that an external datalogger has sent an error signal to the BAM-1020 on the TELEM FAULT input, indicating that the logger unit has encountered a problem. This feature is almost never used. These alarms do not prevent the BAM from storing a valid data record for the sample hour.
M	**Maintenance Alarm**	This alarm almost always indicates that the sample cycle was stopped because someone entered a SETUP or TEST menu for calibration or testing purposes. Maintenance flags always cause the digital concentration value to go full-scale for that hour, because the sample cycle was not finished.
I	**Internal Error or Coarse Link Down**	The “I” error is rare, and indicates that an error occurred in the BAM concentration, mass, span, or stability calculation which prevented the generation of a valid concentration value. The digital error log will indicate which of these calculations has failed. The concentration value is set to full-scale due to invalid data. This may indicate a problem in the digital circuitry. In BAM-1020 units configured as the PM_{10} master unit in a PM-coarse pair, the “I” alarm indicates that the digital link between the two units is down, and the master unit could not obtain the $PM_{2.5}$ value from the slave unit and thus could not calculate a coarse value. The coarse and $PM_{2.5}$ values will be full-scale.

L	**Power Failure or Processor Reset**	This error occurs if AC input power is lost even momentarily, or if the power switch is turned off. Frequent “L” errors usually indicate poor quality AC power. If frequent power errors occur even when the unit is connected to a UPS backup system, contact Met One for instructions on possible power supply upgrades. Anything that causes the microprocessor to reset will also result in an “L” error, such as low voltage on the 5.25V Vcc system, bad connections on the internal DC power harness, or in rare cases electrical interference. All power failure errors cause the digital concentration value to go full-scale.
R	**Reference Error or Membrane Timeout**	This error indicates that the span reference membrane assembly may not be mechanically extending or withdrawing properly. The error is generated if photo sensors S2 and S3 never change state after 15 seconds despite drive commands to the membrane motor. The digital error log will indicate which photosensor timed out. It may be a simple sensor/flag alignment problem that can be identified and corrected using the TEST > ALIGN menu. However, if the span foil assembly is stalled in a partially extended position, it could block the beta signal and prevent valid data collection.
N	**Nozzle Error or Delta-T Alarm**	This error indicates that the nozzle motor is not operating correctly. The error is triggered if photo sensors S4 and S5 never change state within 12 seconds, despite drive commands to nozzle motor. The concentration value is set to full-scale if the nozzle motor or sensors have failed. The digital error log will indicate which photosensor timed out. **Important Note:** The nozzle sensors watch the motor cam rotation, not the actual action of the nozzle itself, so it is technically possible for the nozzle to become stuck in the UP position even if the motor and sensors indicate no error. This could result in a massive flow leak and useless data with no errors or alarms being generated! Proper maintenance of the nozzle o-ring and proper inlet alignment prevent this. Due to a limited number of discrete alarms, the “N” alarm is also used to indicate that the Delta-Temperature set-point was exceeded by more than 1 degree, if Delta-T control is enabled. In this case the alarm is used to simply as a flag, and valid concentrations are still stored. Delta-T control is disabled in almost all applications. See Section 6.9. Download the error log file to tell if the alarm is from a nozzle failure or simply a Delta-T event.
F	**Flow Error**	Critical flow errors result in the sample being terminated and/or the concentration data being set to full-scale. Minor flow alarms occur if a parameter was out of bounds, but the sample was not stopped and concentration data is still stored. The digital error log contains the exact sub-category which generated the alarm: • **Flow Failure** - Flow > 10% out of regulation for more than 1 minute. • **5% out-of-regulation** - Flow > 5% out of regulation for more than 5 minutes. • **AT Disconnected** - Missing or incorrectly connected AT sensor. • **AT Failure** – One minute average of the AT sensor was within 1 degree of the sensor min or max range. May occur in extreme cold or hot environments. • **Internal or External BP Failure** – One minute average of the barometric pressure sensor exceeded the min or max range of the BP sensor. • **Q Total** – Total hourly flow volume was zero. • **Average** – Hourly average flow was outside of the FRh and FRL parameters as set in the SETUP > ERRORS screen. • **Self-Test** – Self test flow rate less than 10 L/min. • **Pump Off Failure** - Flow sensor indicates >5 L/min with the pump turned off. Flow errors can occur due to a fault with the flow controller or flow sensor, or if the vacuum pump is wearing out or has a clogged muffler. See the troubleshooting section below.

P	**Pressure Drop Alarm or Delta-Pressure Alarm**	This error indicates that the pressure drop across the filter tape has exceeded the limit set by the “AP” value due to heavy particulate loading plugging the tape pores. Current firmware will stop the sample early when this occurs, and make the concentration calculation based on the partial volume, then wait for the next hour. This feature is designed to stop the sample early if the vacuum capacity of the pump is about to be exceeded, before flow errors occur. Firmware before Rev 3.6.3 would not stop the sample for the “P” alarm, and subsequent flow errors could occur due very high concentration dust loading. The pump cycle must run for at least 5 minutes before a pressure drop alarm event can occur. See Section 6.5.
D	**Deviant Membrane Density Alarm or BAM CAL alarm**	This error indicates that the reference membrane span check measurement (**m)** for that hour was out of agreement with the expected value (**ABS**) by more than ±5%. These alarms are usually caused by a dirty or damaged membrane foil, which must be inspected. If the foil is clean and undamaged, the alarm could indicate that the beta detector tube itself is noisy or beginning to wear out, or that the membrane holder is not extending and withdrawing fully. These alarms do not prevent the BAM from storing a valid concentration for the sample hour because the dust mass is a completely separate measurement, but the alarm must be investigated and resolved in order to ensure proper beta detector operation. Note: If the ABS value is less than 0.500 mg, then the alarm criteria is ±25µg, not ±5%, This feature is not used.
C	**Count Error or Data Error**	This error indicates that the beta particle counting system is not operating properly, and is activated if the beta count rate falls below 10,000 counts during any of the mass, membrane, or stability measurements. The 4-minute beta count rate through clean filter tape is usually more than 800,000 counts. This rare error occurs if the beta detector, high voltage, or digital counter has failed, or if the beta signal is physically obstructed. This alarm sets the concentration value to full-scale. The sub-category “count, failed” occurs if the beta counter is still counting 10 seconds after the scheduled end of any count period, indicating a digital fault.
T	**Tape System Error or Filter Tape Error**	The tape error usually indicates that the filter tape is has run out or broken. It occurs if the right spring-loaded tensioner (tape roller nearest to the detector) is at the far left limit of its travel. In this case, tape break photosensor S6 is ON continuously, despite drive commands to the tape reel motors and the capstan motor. The tape error is also generated if the pinch rollers are latched in the up position when a new sample hour starts, preventing the cycle. **Note:** *Firmware revision 3.6 and later will cause the concentration value to go to full-scale due to a tape error, because the cycle cannot be performed with broken tape. All previous firmware revisions did not set the concentration to full-scale, but instead repeated the last valid concentration value until the tape was replaced. This older method was confusing, and was changed due to user requests.* In rarer cases, a tape error may also be generated due to a failure in the tape control electromechanical system. In current firmware there are several possible sub-categories for this error which will appear in the digital error log: • Tape, Latch – Pinch rollers latched up at cycle start. • Tape, Shuttle – Shuttle photosensor not responding to shuttle move. • Tape, Forward/Backward – Tape supply motor or take-up motor not responding. • Tape, Tension/Un-tension – Tensioner photosensor not responding. • Tape, Capstan – Capstan motor or capstan photosensors not responding. • Tape, Self-Test – Shuttle beam did not respond during self-test. • Tape, Break – Broken or empty tape. Tape errors caused by failures other than broken tape or latched pinch rollers can usually be identified using the TEST > ALIGN menu to manually operate the motors and photosensors. See Section 7.16. Tape errors can be caused by grit in the shuttle beam ball slide. Contact tech service if the left/right shuttle slide action is not smooth.

7.3 Correlating BAM-1020 Data to FRM Sampler Data

The BAM-1020 instrument is designed and calibrated specifically to provide average concentration data that matches 24-hour gravimetric analysis filter samplers, including EPA Federal Reference Method (FRM) type samplers. It is very common for BAM-1020 units to be at least temporarily collocated with filter samplers for instrument validation or acceptance testing purposes.

The primary correlation analysis method is a linear regression between 24-hour averages of the BAM-1020 data and daily gravimetric filter weight data points for the same days as shown below. The combined slope and offset values of the BAM-1020 regression should usually be within bounds as shown in the polygon.

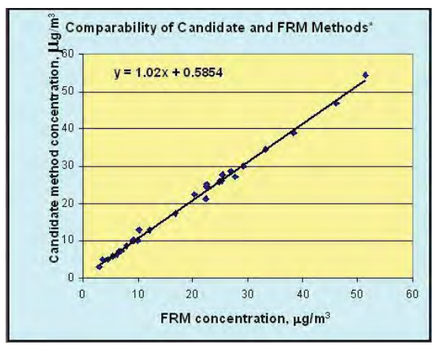

Regression statistics		Slope [1]	Intercept [2]	Correlation (r)
Statistics for this test site:		1.020	0.585	0.99765
Limits for	Upper:	1.100	1.586	
PM2.5 Class III	Lower:	0.900	-2.000	0.95000
Test Results (Pass/Fail):		PASS	PASS	PASS

BAM-1020 linear regression and dot-within-matrix polygon plots (from EPA template)

There are several considerations which must be taken into account in order to obtain good correlation results when BAM-1020 units are compared to filter samplers:

- **Background Offset Correction:** If the BAM-1020 correlation shows an offset (additive bias) compared to the FRM, then the background offset correction (BKGD) value may need to be audited by running the unit with the zero filter. See Sections 7.7 and 6.3. This is a required test during deployment of a $PM_{2.5}$ FEM BAM-1020. The background value is a true data offset, so if it's not correct then correlation offsets can also be out of bounds.
- **Critical Maintenance:** The BAM-1020 leak check, nozzle cleaning, and flow checks must all be within bounds during comparison tests. These can result in inconsistent positive or negative data biases if neglected.
- **Flow Calibrations:** The BAM-1020 and the filter samplers should be calibrated using the same AT, BP and flow standards whenever possible.
- **RH Control:** High humidity on the BAM-1020 filter dust spots can cause the BAM mass values to measure too high, resulting in high slopes (multiplicative bias). Make sure that the filter RH sensor is not improperly calibrated (section 7.19) and verify the smart inlet heater setup values. The Channel 4 filter RH data from the BAM should show proper regulation below 35% or 45% RH.

- **Strict Collocation:** The BAM-1020 and filter sampler inlets must be strictly collocated during comparison tests! The inlets must be at the same height and within 1 and 4 meters spacing. See Section 2.3.
- **Analog Voltage and Scaling Errors:** The BAM-1020 digital data should be used for comparison tests whenever possible. If analog output voltage must be used, then the operator must verify that the BAM voltage output is accurate, and that the datalogger is scaled to record the voltage correctly. If the logger is scaled incorrectly, then a significant data offset between the BAM and the sampler will result. See Sections 6.2, 7.12, and 8.1.
- **Filter Handling:** The samples from the filter sampler unit must be handled, collected, and analyzed correctly in order to get good correlations to the BAM-1020. Single-event samplers tend to match the BAM better than sequential samplers where the samples are left in the field longer. Careful and correct filter handling will often prevent slope biases caused by volatile compounds on the filter samples.
- **Daily Data Sets:** In most cases, the 24 hourly BAM data points used for the daily BAM averages should be the same 24 hours that the actual filter sample was run.
- **Limited Data Set Effects in Low Concentration $PM_{2.5}$:** In some areas where the daily concentration averages are always within a very tight range (such as always between 5 and 10 micrograms of $PM_{2.5}$) it can be difficult to trend an accurate slope in the linear regression if there are not enough data points. This is almost like trying to make a slope through a single point. This can appear as a slope bias in the BAM correlations when there may really be no problem. The solution is to continue to add data points to the data set until even just a couple of slightly higher data points are obtained.

7.4 Power Up Problems and Electrical Safety Considerations

The BAM-1020 must be at a state where it can be powered on before any other testing or diagnosis can be performed:

- Make sure that the unit is plugged into the correct AC voltage. The unit is internally wired for either 110/120V or 220/240V. The digital, analog, and user interface systems are powered from a universal-input power supply, so these should work even if the line voltage is not correct. The filter tape, nozzle, and span check control motors all run on AC voltage and will not operate correctly if the line voltage is incorrect.
- Check the two fuses (3.15A, 250V) inside the power switch housing. The power cord MUST be removed before the fuse door can be opened, or you will break it. Pry open the top edge of the power switch housing cover to access the fuses. See Section 2.6.
- It is possible for the display contrast to be set so lightly that it looks like the display is OFF when it is really ON. Try pressing and holding the contrast key on the front door for a few seconds while the unit scrolls through the contrast settings. In rare cases the display may fail completely. If the unit "beeps" when you press the keys, it is ON.
- If the above checks do not resolve the power-up problem, then there could be a failed power supply or other significant problem inside the unit. Contact Met One for further

instructions. Do not attempt to open or repair the power supply assembly unless qualified.

Warning! The BAM-1020 uses hazardous live voltages which can cause electrocution if electrical safety precautions are not strictly followed during service or repair of the machine. The BAM-1020 is designed to provide protection from hazardous voltages during normal operation. If the equipment is modified or used in a manner not specified by the manufacturer, protection provided by the equipment may be impaired.

Hazardous voltages are present in the following areas:

- **Power Supply AC:** The main power supply is located inside the BAM-1020, inside the power supply sub-enclosure labeled “DANGER HIGH VOLTAGE”. The power supply enclosure contains the main AC-to-DC converter and the motor driver board for the transport motors, all of which contain live AC line voltage when the unit is powered up. Do not open the power supply sub-enclosure lid without unplugging the BAM-1020 power cord.
- **Detector Negative High Voltage DC:** The 3150 circuit board is inside the BAM-1020, mounted vertically on the outside of the power supply sub-enclosure, and covered with a clear plastic safety shield. This circuit board generates a dangerous negative DC bias voltage for the beta detector of between -800 and-1200 volts. Do not remove the clear cover or touch the board without unplugging the BAM-1020. Do not touch the large green capacitor or the detector preamp board with the BAM-1020 turned on.
- **Pump AC:** The vacuum pump is powered by AC line voltage, and has its own power cord. Do not open the electrical junction box on the side of the pump, or touch the enclosed solid-state relay without first unplugging the pump power cord.
- **Inlet Heater AC:** The inlet heater is powered by AC line voltage. The heater either plugs into an external gray plastic relay enclosure on the back of the BAM (with its own power cord), or it plugs directly into the back of the BAM and takes power from the main power supply, with the relay located under a clear plastic cover on the inside floor of the BAM enclosure. See Section 2.5. Do not open the relay cover or touch the relay while the BAM and/or the relay box is plugged in. Do not remove the cylindrical metal shell from the smart heater module, or touch any of the internal parts while the heater is plugged in. The heater module does not contain any serviceable parts inside the metal shell.

7.5 Basic Problem and Cause/Solution Table

The following table contains information on some of the more common BAM-1020 problems which may be encountered, and some steps to identify and remedy the problems. Met One welcomes customer suggestions for new items to include in this section of future manual revisions. If the solution cannot be found in the following table, then contact one of our expert service technicians for help in resolving your problem.

Problem:	**The BAM won’t start a measurement cycle.**
Cause/Solution:	• The unit is programmed not to start a sample cycle until the beginning of an hour. Make sure the clock is set correctly. • The unit will wait until the beginning of a new hour before it starts, even if the operation mode is set to ON. • Don’t expect the pump to turn on until the clean tape count is finished, about 8 minutes after the start of the hour. • The unit cannot start if the pinch rollers are latched UP! The unit cannot lower them. • Make sure the filter tape is installed correctly. • The unit will never start a cycle if the display is left in a TEST or SETUP menu! The main screen or OPERATE menu must be displayed. • The unit will usually display an error if it cannot start a new sample cycle.

Problem:	**The analog output voltage and/or digital concentration reading are full-scale.**
Cause/Solution:	• The unit will force the analog and digital concentration values to full-scale (usually 0.985mg) to indicate that an error has prevented the collection of a valid hourly data point, or that the hourly cycle was interrupted. Download the digital error log to identify the cause. The current hourly record after power-up will also be full-scale.

Problem:	**The BAM hourly concentration is reading negative values.**
Cause/Solution:	• It is possible for the unit to occasionally read negative numbers if the actual ambient particulate concentration is below the detection limit of the BAM-1020, such as below 3 micrograms. This is because the BAM has a noise band of several micrograms. This should not happen often. • If the unit is reading negative numbers hour after hour, it may be punching holes in the filter tape. These holes can be very small. This is almost always caused by debris on the nozzle or vane. Clean the parts. • The BKGD zero correction offset value may have been incorrectly entered, or may need to be audited. Met One supplies the BX-302 zero filter kit for auditing the zero average and noise floor of the unit. Set the BKGD value to 0.000 during the test. • Look for sources of electrical noise, such as bad grounding. Any source of noise will show up in the zero filter test. • Verify that the inlet tube is grounded to the chassis of the BAM-1020.

Problem:	**The airflow rate is too low and won’t adjust up to 16.7 L/min.**
Cause/Solution:	• The gray plastic pump mufflers on the Medo pumps may clog up after several months. Replace it or drill a hole in the end of it for a temporary fix. The brass mufflers on Gast pumps can often be cleaned. • Some users replace the pump muffler with a 30 inch length of air tubing. This will not clog and reduces the pump noise as well as the mufflers do. • The vacuum pump may need to be rebuilt after about 2 years. Medo pumps slowly loose flow capacity as the pump wears out. Eventually, the flow capacity drops below 16.7 lpm when it needs to be rebuilt. • Checking the 18.4 L/min point during the regular 3-point flow audits verifies the pump capacity. • Check the inlet and PM heads for obstructions.

Problem:	The airflow is stuck at a particular rate, and will not change.
Cause/Solution:	• The flow controller unit on some older units can become stuck. If your flow controller does not have a small circuit board mounted directly on the motor, it needs to be upgraded. Contact the Service dept. • Perform the 3-point flow audit in the TEST > FLOW screen. The BAM should try to regulate to these flow values. If the flow does not change, the flow controller may not be working. • Unplug the pump power while performing a 3-point flow check. With the pump off, you should be able to clearly hear the flow controller pulse at 1-second intervals as it rotates and attempts to regulate the flow. If not, the flow controller is not working or the circuit board output is not working. • If the flow regulates lower, but not higher than 16.7 lpm, the pump is probably worn out, or there is a leak.

Problem:	The nozzle gets stuck in the UP position, or won't press down onto the tape fully.
Cause/Solution:	• With the nozzle in the down position, lift the nozzle up and down with your thumb and determine if it feels sticky or gritty. • The nozzle o-ring eventually breaks down and needs to be replaced. See Section 7.6 for instructions. • The brass nozzle bushings may have grit in them. See Section 7.6. Remove the nozzle and clean the parts. A shim kit is required for nozzle reassembly. • A stuck nozzle is sometimes caused by a misaligned inlet tube. Make sure it is straight up and perpendicular to the top of the unit.

Problem:	The unit has flow leaks, even after cleaning the nozzle and vane.
Cause/Solution:	• The nozzle may be sticking as described above. Verify that the nozzle up/down motion is smooth and complete. If the nozzle feels sticky or gritty, it will not seal properly. • Check the o-rings on the sharp-cut cyclone (if used). These frequently leak. • Check the zero of the flow sensor in the BAM: Perform another leak check, but disconnect the tubing between the pump and the BAM, so there can be no air flow through the unit. Verify that the flow reading on the BAM reads less than 0.2 L/min. If not, the flow sensor $\mathbf{Q_0}$ zero offset setting may need to be adjusted in the SETUP > CALIBRATE menu. The Q_0 setting is usually very close to zero. • Check for bad o-rings on the BAM inlet tube receiver. • Remove the BAM case cover and inspect all air fittings inside the BAM. These are compression fittings, and must be fully inserted to prevent leaks. • Inspect the internal and external flow system for split or cracked air tubing.

Problem:	The unit logs frequent "L" Power Failure errors.
Cause/Solution:	• The 5 volt DC power supply output must be set to 5.25 volts. Contact the Service dept for instructions to check or adjust this. • The CHASSIS terminal needs to be connected to a good earth ground. • Try plugging the BAM into a computer-style UPS. • Even a split second power failure will cause an "L" error. This will interrupt the sample cycle until the top of the next hour. • Local high power RF fields must be avoided if possible. • Some vintages of the DC power supply used in the BAM can be prone to oxidization on the harness pins which can cause the unit to reset frequently. Upgrade parts may be available for certain units. Current power supplies have the output harness wires soldered to the supply. Contact the Service department. • Rarely, some older 220 volt units can experience resets caused by the Smart Heater control wiring inside the BAM. Contact the Service department.

Problem:	The BAM data shows repeated concentration values hour after hour.
Cause/Solution:	• Certain error flags, such as the "T" (tape broken) flag will cause the BAM to repeat the last known good concentration value until the error is resolved. Check the error log to identify any errors for those hours. This only occurs on firmware before R3.6. • If the RANGE setting on the BAM is set higher than 2.000mg, them the resolution of the A/D system is reduced to 2 micrograms. If the ambient air concentrations do not vary much over several hours, then the BAM data may show repeated values due to lost resolution. Leave the RANGE set to 1.000mg unless very high concentrations are expected.

Problem:	Frequent "D" membrane density errors.
Cause/Solution:	• This usually indicates the membrane foil surface is dirty or damaged. It can be cleaned with water rinse. Damaged membranes must be replaced. • The membrane assembly may not be fully extending or retracting properly, which causes the metal part of the assembly to partially or completely block the beta particles. Check the membrane motion. • Verify that the ABS expected membrane mass matches the calibration certificate.

Problem:	The clock settings are lost when the unit is powered down.
Cause/Solution:	• It is normal for the clock to drift as much as 1 minute per month. • The BR2032 lithium battery on the 3230 circuit board may need to be replaced after about 10 years on units built before 2008. • Units built after 2008 may need the lithium battery replaced every 1-2 years.

Problem:	The filter tape keeps breaking during normal operation.
Cause/Solution:	• The photo sensors which watch the tape transport motion may be out of alignment. Check the photo sensors as described by section 7.16. • This is sometimes caused by misalignment of the "SHUTTLE" photo sensor or the interrupter flag on the end of shuttle beam inside the BAM.

Problem:	The display shows "MISSING TEMP PROBE" message.
Cause/Solution:	• The unit requires a BX-596 or BX-592 ambient temperature sensor if either the CONC TYPE or FLOW TYPE are set to ACTUAL. If no sensor is attached to channel 6 of the BAM, this message will appear. • If the Auto ID line from the temperature sensor is not working, the BAM will not ID the sensor, causing the alarm. • BAM-1020 units with firmware part 3236-2 (PM10 only) cannot identify the BX-596.

7.6 Nozzle Component Service and O-ring Replacement

The BAM-1020 sample nozzle system needs periodic inspection and service in order to prevent flow leaks. The primary indicator is if the nozzle up/down motion feels sticky or gritty when performing the normal monthly nozzle cleaning, or if the nozzle fails to fully seal against the tape when lowered, causing leakage. The nozzle o-ring may need to be replaced approximately every two years during continuous operation. This is a simple matter and no special tools are required. Instructions for o-ring replacement are below.

The sample nozzle may also be easily removed from the unit for further cleaning or rebuild. This requires a set of brass adjustment shims to set the spring tension during reassembly. The standard BX-308 BAM tool kit contains all of the required tools and instructions. The BX-310 kit includes the two shims only.

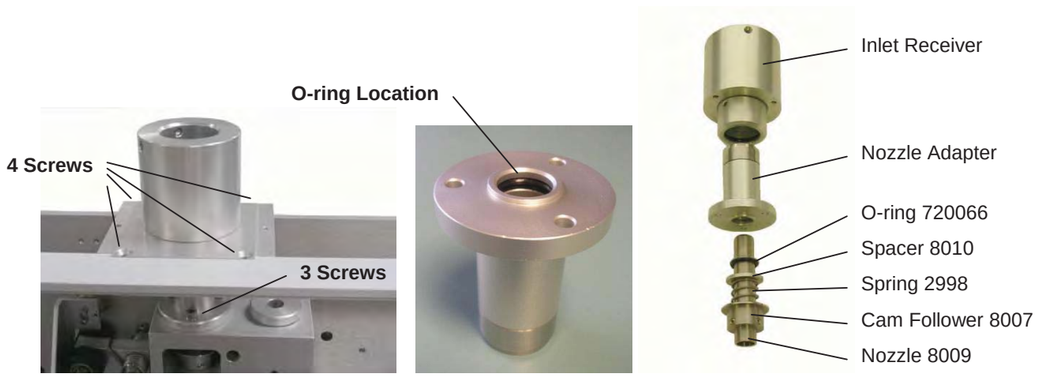

1. Remove the filter tape and the main BAM-1020 case cover. The sample nozzle must be in the down position. Lower it using the TEST > PUMP menu if needed. Lift the nozzle up and down against its spring with your thumb and note the action feel.
2. Remove the four screws (two flat head Philips, two 9/64” hex) that fasten the square inlet receiver bracket to the BAM chassis. Lift the assembly off of the BAM. It is not necessary to remove the bracket from the inlet receiver cylinder.
3. Remove the three 9/64” hex screws that fasten the nozzle adapter to the top of the beta block. A T-handle hex wrench is easiest. The nozzle adapter can now be lifted off of the top of the nozzle, revealing the o-ring location. Clean the top of the nozzle.
4. Remove the o-ring from the groove. Thoroughly clean the o-ring groove and the inside if the nozzle adapter using alcohol and cotton-tipped applicators, then install the new o-ring and lubricate it with silicone grease.
5. Check the nozzle up/down action again before reassembly. If the nozzle action feels smooth, then reinstall the nozzle adapter and inlet receiver assemblies. Check the nozzle action after each step of reassembly to identify any binding or sticking. Perform a normal leak check when finished.
6. **Optional further disassembly (shim set required):** If the nozzle action feels feel sticky or gritty with the nozzle adapter removed, then the nozzle needs to be removed and the nozzle and bushings cleaned. Loosen the two (or three) set screws in the cam follower with a 5/64” hex wrench. The nozzle can now be lifted out of the bushings. The cam follower, spring, and spacer can be removed from the front of the block.
7. Clean the nozzle inside and out, and inspect the nozzle face for any burrs or defects. Clean the two brass bushing bores with a cotton-tipped applicator. This is also a good time to clean and inspect the tape support vane since the nozzle is out of the way. The bushings do not need to be lubricated. Reinstall the cam follower, spring, and spacer, and align them with the bushing bores.
8. Lower the nozzle down through the bore. The two brass shims must be positioned as shown before the set screws are tightened to retain the nozzle. The square shim must be under the nozzle face. The slotted shim goes under the cam follower. Tighten the set screws evenly, only a little at a time to avoid distorting or binding the nozzle.

9. Remove the shims and check the up/down action of the nozzle before reassembling the nozzle adapter and inlet receiver. It must feel smooth and even after each step of reassembly. If the nozzle still binds or sticks, then contact technical service.

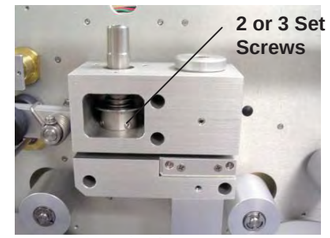

Nozzle Removal

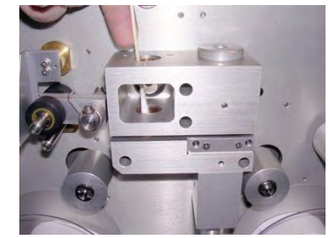
Cleaning the Bushings

Using Shims for Reassembly

7.7 Performing the 72-Hour Zero Filter Background Test

All BAM-1020 units configured as EPA $PM_{2.5}$ FEM or EU designated $PM_{2.5}$ monitors must have a zero filter background test performed when the unit is first deployed and commissioned at the field site. The test may also be repeated on an annual or semi-annual basis to verify the zero performance of the unit, and is optional for PM_{10} units. The background test requires the BX-302 Zero Filter Kit, which is included with all $PM_{2.5}$ units.

The primary purpose of the test is to fine-tune the Background Offset (BKGD) value in the BAM-1020 to compensate for minor variations in local site conditions, such as grounding, radon, or RFI characteristics. This results in optimum accuracy at lower concentrations typical of $PM_{2.5}$ levels, and appropriate offsets when compared to FRM filter samplers. A secondary purpose of the test is to provide information about the hourly noise level and detection limit of the BAM-1020 being tested. *Any source of noise that will affect your concentration values, such as leaks, bad grounding, RFI/EMI, a failing beta detector, or improper shelter temperature control, will also be visible on the zero filter test results*.

The Background (BKGD) value is an offset correction factor for all concentration data collected by the BAM-1020 (see section 6.3). This value is factory calibrated for each unit under laboratory conditions using the same type of zero filter. The factory BKGD value is found on the calibration certificate, and may be left as-is for PM_{10} monitoring.

Note: For best results, the zero test should not be performed during a period of rapidly changing barometric pressure. The shelter room temperature must be within the specified range, and as stable as possible. See Section 2.2. This will prevent any rapid changes in air density between the beta source and detector from being measured as additional mass noise or background shift.

The BAM-1020 must be fully installed in the shelter at its permanent sampling site, and it must be fully configured with all of the correct settings and accessories for normal operation, including the smart inlet heater. The unit should be warmed up for about 24 hours before starting the zero test to ensure best stability. If this is not possible, then the first day of zero data may simply be ignored during data analysis. A leak check and flow check should be performed before proceeding on to the following steps for the zero background test:

1. The BKGD value is located in the SETUP > CALIBRATE menu. **Record the existing BKGD value, then change it to 0.0000**. Save and exit back to the main menu.

2. Remove the PM_{10} inlet and $PM_{2.5}$ cyclone. Install the BX-302 zero filter assembly onto the top of the inlet tube as shown below. If there is any chance of precipitation, install the included plastic fitting and short length of tubing to keep rain out of the filter inlet. **Note:** It is completely acceptable to install the zero filter inside the BAM shelter (just above the smart heater) using a short inlet tube. This helps prevent condensation inside the zero filter which can adversely affect the zero test in humid conditions.
3. Allow the BAM-1020 to sample for at least 72 hours, not counting the warm-up period. The unit should operate just like it would for regular $PM_{2.5}$ or PM_{10} monitoring, only with the zero filter installed instead of the PM_{10} inlet and cyclone.
4. After at least 72 hours of operation, download the test data from the unit and import it into a spreadsheet for analysis. The error log should not contain any error flags during the test period. Data collected during the warm-up period may be discarded because the first few hourly data points after power-up are typically noisy. The remaining data will be used for analysis. *Note: Met One has a free Microsoft Excel® template available for the zero test analysis. All calculations and graphs are done automatically*.
5. Calculate the average of the 72 hourly BAM concentrations to four decimal places. **The new BKGD value is simply the negative of this average**. Enter the new BKGD value into the SETUP > CALIBRATE menu on the BAM. For example, the average of the data sample below is 0.0021 mg (2.1 µg), so the correct BKGD value is -0.0021.
6. Compare the new BKGD value to the previous factory-set BKGD value. The field-set BKGD should typically vary from the factory value by less than 2 µg. Record the test results and any BKGD changes, and keep it with the audit records for the BAM-1020.
7. Remove the BX-302 zero filter and reinstall the PM_{10} and $PM_{2.5}$ inlets. The unit can now be operated normally. The new BKGD value will be automatically applied to all hourly concentration data points in the unit.

Optional zero noise analysis: Graph the hourly concentration data so that the zero noise characteristics of the BAM-1020 from the test are visible. Calculate the standard deviation (σ) of the hourly zero test data (STDEV function in Excel) to four decimal places. The value should be less than 2.4 µg, and can be as low as 1.1 µg on some units. Lower standard deviations mean less noise. This natural noise band is caused by small statistical variations in the beta source output. The hourly detection limit is defined as two-times the hourly standard deviation (2σ). The daily detection limit is defined as 2σ/4.9 and will be less than one microgram. The example below shows a typical low-noise data set from a $PM_{2.5}$ FEM unit. If the standard deviation is more than 2.4 µg, then external noise sources should be investigated. **Note:** Older non-FEM compatible units may not meet these noise specifications.

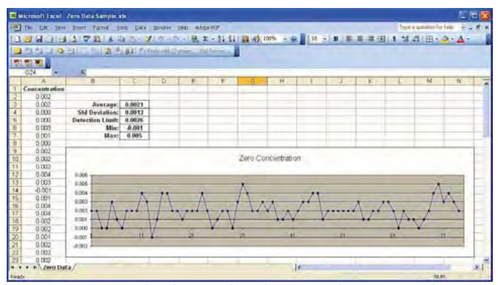

Typical zero background test results

BX-302 Zero Filter Kit

7.8 The TEST Menu System – Overview

The following sub-sections provide information for performing diagnostic checks on the BAM-1020 sub-systems using the TEST menus. Most of these tests are used for troubleshooting purposes only, and are not necessary on properly functioning units. The TEST menu system is accessed by the TEST soft-key from the main menu and is shown below. These screens are used to perform calibrations and audits of various sensors, as well as some advanced diagnostics to resolve failures and errors.

```
TEST MENU

COUNT       PUMP        TAPE       DAC
CALIBRATE   INTERFACE   FLOW       ALIGN
HEATER      FILTER-T    RH


 SELECT                            EXIT
```

The TEST Menu

7.9 COUNT Test Menu – Beta Detector Count Tests

The TEST > COUNT screen allows the user to check the function of the beta detector and beta source separate from the rest of the mechanical or flow operations. Each count test will take 4 minutes, and will show the number of beta particles counted as they accumulate. The final count total will stay on the display after the counting is finished, and up to six count tests can be displayed on the screen at once. Count tests are usually performed with a clean section of filter tape between the source and detector, as in normal operation.

The GO soft key is pressed to start a new four-minute static count test. The COUNT value on the screen will immediately begin to count rapidly if the detector is operational and unobstructed. Typical four-minute count totals through clean filter tape are between 600,000 and 1,100,000 counts. The count total will be lower if the membrane is extended. After four minutes the counting will stop and wait for the operator to initiate another count or EXIT.

The M value on the screen indicates if the membrane was extended (Y) or withdrawn (N) during the count period. The MEMBRN and NO MEMBRN soft keys can be used to manually extend or withdraw the span membrane foil before a count test if desired.

Dark Count Tests: A steel shim such as Met One 7438 can be placed between the beta source and detector to perform a dark count test. The shim blocks all beta particles, and only counts created by noise or cosmic rays will appear. The total four-minute dark count value should be less than 10 counts. If the total is more than 50 counts, contact technical service.

7.10 PUMP Test Menu – Manual Pump and Nozzle Tests

The TEST > PUMP screen is used to perform leak checks. It can also be used to manually force the pump on and off, or to manually move the nozzle. **Note:** *The BAM will regulate the flow to the 16.7 L/min setpoint, but the flow rate shown on this screen is uncorrected and always in standard conditions, even if the BAM operates in actual flow mode*. For this reason,

no flow audits or checks should be performed using this screen! Obsolete BAM-1020 units with a manual flow valve were calibrated using this screen.

```
          NOZZLE/PUMP TEST MODE

NOZZLE: ▼

FLOW:       16.7 SLPM   PUMP:  ON

MOVE NOZZLE   PUMP ON   PUMP OFF   EXIT
```

The PUMP Test screen

The NOZZLE status value will indicate if the nozzle is currently UP (▲) or DOWN (▼). The PUMP status indicates if the pump is turned ON or OFF. The FLOW value is the current flow rate, displayed in standard liters per minute (25C) only.

The MOVE NOZZLE soft key can be used to force the nozzle up or down for testing purposes. Elapsed time is about 5 seconds. If the pump is ON this operation is disabled.

The PUMP ON and PUMP OFF soft keys can be used to turn the vacuum pump on or off. The nozzle will be lowered automatically if PUMP ON is pressed.

7.11 TAPE Test Menu – Manual Filter Forward/Backward Tests

The TEST > TAPE menu allows the user to manually move the filter tape forwards or backwards in increments of 12.5mm “windows”. This is useful for spooling up the first few turns of a fresh roll of tape, to test the tape transport mechanism, or to change spots of tape for flow or count tests. The nozzle will be automatically raised if necessary, and the tape will take a couple of seconds to move each window.

The “X:” value is the number of windows moved in the last motion. This number will be negative if the last move was backwards.

The FEED value is the number of tape windows you want to move. Use the arrow up/down keys to select up to 10 windows at a time.

The FWD and BKWD soft key move the tape forward or backward by the current amount of the FEED value.

7.12 DAC Test Menu – Analog Output Test

The TEST > DAC screen is used to test the function of the analog output voltage and the DAC (digital/analog converter) electronics. Use the up/down arrow keys to force the voltage to any value between 0.000 and 1.000 volts (0.100V increments). The corresponding voltage on the VOLT OUT +/- terminals on the back of the BAM-1020 should always match within ±0.001 volts. Use a high-quality voltmeter for these tests. If the actual voltage does not match the value on the TEST > DAC screen, contact the service department.

Note: This function is critical for all users of external analog data loggers. Measure the voltage all of the way to the input of your data logger. Every millivolt of error is a microgram of error! Make sure the logger is scaling the voltage correctly. In most cases 0.000V should scale as -0.015mg, and 1.000V should scale as 0.985mg. See Section 6.2.

7.13 CALIBRATE Test Menu – Span Membrane Mass Tests

The TEST > CALIBRATE screen is used to perform tests of the reference membrane span check which occurs automatically every sample cycle. This test can be run if the BAM-1020 has been logging **D** errors. Each BAM-1020 has an individually weighed membrane, and this mass **(m)** is measured and displayed during this test. Compare the value from this test with the ABS value on the calibration sheet for your unit. The values must match within 5%, and will typically match within just a few micrograms. If not, the most common cause is a dirty membrane foil, which can be carefully cleaned with canned air or clean water rinse. Alcohol is not used because it leaves a film. CD cleaner works well for badly soiled membranes.

Caution: The span membrane foil is a thin sheet of polyester and is fragile. It must be replaced if damaged. Contact the Service department for replacement instructions.

```
          CALIBRATION MODE

REF MBRN: <
COUNT  (Io):        634000
COUNT  (I):         556234
CAL MASS M:         0.801 mg/cm2

START     STOP                    EXIT
```

The CALIBRATE Test Screen

The REF MBRN value indicates if the reference membrane is currently extended **(>)** or withdrawn **(<)** from the beta particle path.

The COUNT (I_0) value is the total 4-minute beta count through the filter tape only.

The COUNT (I) value is the total 4-minute beta count through both the filter and the membrane, and is always less the I_0 count.

The CAL MASS M value is the measured mass of the foil derived from the two count values.

The START soft key starts the test cycle. Counting will immediately begin. After 4-minutes the I_0 count will stop, the membrane will extend, and the I count will begin. At the completion of the test, the counting will stop and the mass of the membrane will be calculated. The total elapsed time is about 8.1 minutes per test.

7.14 INTERFACE Test Menu – Relay I/O Channel Tests

The TEST > INTERFACE screen is used to test the relay inputs and outputs on the back of the BAM-1020. The two inputs TELEM FAULT and EXT RESET are tested by applying the appropriate signal to the terminals on the BAM, then verifying that the value on this screen changes in response.

The relay outputs TAPE FAULT, FLOW FAULT, INVALID DATA, MAINTENANCE, RELAY 1, and RELAY 2 are tested by turning them ON or OFF using the arrow keys, then verifying that the contact closure outputs on the back panel terminals respond accordingly with an Ohm-meter. The old RANGE relay output is no longer supported.

7.15 FLOW Test Menu

The TEST > FLOW screen is where the important flow audits, checks, and calibrations are performed on the BAM-1020. See section 5.6. This screen is also useful for checking the ambient temperature and barometric pressure sensors, and for pump capacity and flow controller tests.

7.16 ALIGN Test Menu – Tape Transport Motor and Photosensor Tests

The TEST > ALIGN menu system is used primarily to test the nine photosensors which monitor all of the mechanical movement in the BAM-1020 tape transport assembly. This is useful if the unit has failed some of the Self-Test parameters. The function of the six ALIGN sub-menus are described in this section. **Note:** The filter tape should be removed during these tests, because many of these functions will break the tape.

```
TEST MENU

NOZZLE    SHUTTLE    IDLER     CAPSTAN
LATCH     REF

SELECT                          EXIT
```

The TEST > ALIGN Menu

NOZZLE: This screen tests the two nozzle photosensors and the nozzle motor. Use the UP and DOWN soft-keys to move the nozzle, and monitor the status of the S4 and S5 photo sensors on the screen.

SHUTTLE: This screen tests the photosensor which monitors the position of the shuttle beam (the two outer tape rollers that move together). The status of photo sensor S7 should only change to ON when the beam is moved all the way to the right side. The shuttle must be moved by hand for this test. It rides on a ball slide and is not motor-driven.

IDLER: This screen tests the photosensors which monitors the position of the right-side spring-loaded tape tensioner. The tensioner must be moved by hand. When the tensioner is in the leftmost position under its spring pressure, both photo sensors S6 and S1 should be OFF. If the tensioner is moved to the middle of its travel, photo sensor S1 should be ON and S6 OFF. When the tensioner is at the rightmost position, S1 and S6 should both be ON. These are the sensors which monitor tape breakage and tape tensioning. The left side tensioner assembly has no photosensors.

CAPSTAN: This screen tests the photosensor which watch the rotation of the Capstan shaft motor. This is the shaft under the rubber pinch rollers which drives the filter tape forwards and backwards. Press the ADVANCE soft-key to rotate the Capstan counter-clockwise, and the BACKUP soft-key to rotate clockwise. The shaft should turn one-half of a rotation each time. Photo sensor S8 should turn ON to stop the shaft at each half-turn, and will be OFF while the shaft is turning. It is helpful to put an ink mark on the end of the shaft to view the rotation.

LATCH: This screen shows the status of the pinch roller latch. If the rollers are latched in the UP position, then S9 should be ON. S9 should turn OFF if the latch is unhooked.

REF: This screen tests the two photo sensors which monitor the position of the reference membrane assembly. When the EXTEND soft-key is pressed the membrane should extend and the S2 photo sensor should be ON, and S3 OFF. When the WITHDRAW soft-key is pressed the membrane should withdraw and the S2 photo sensor should be OFF and S3 ON. It takes a few seconds for the membrane to move.

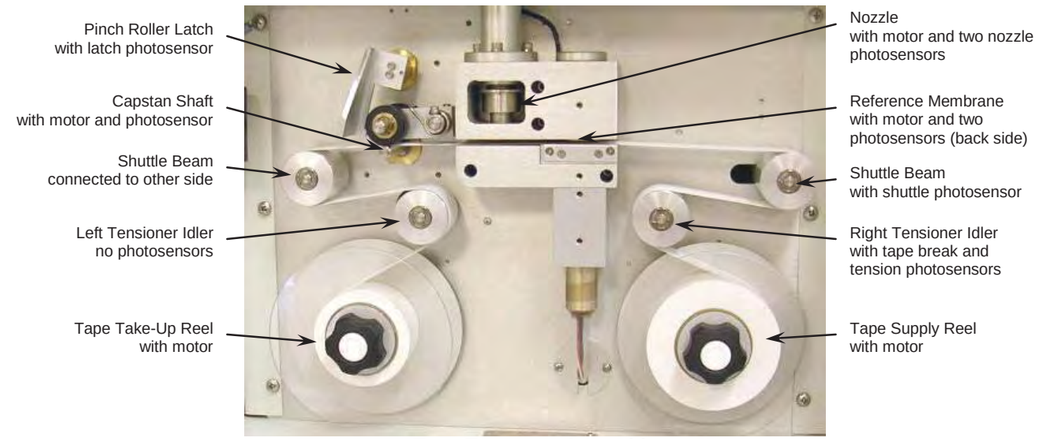

Tape Transport Assembly

7.17 HEATER Test Menu

The TEST > HEATER screen is used to force the Smart Heater ON or OFF for testing purposes. The heater takes several minutes to heat up or cool down noticeably. The heater automatically turns back off upon exit from the screen.

7.18 FILTER-T Test Menu – Filter Temperature Sensor Tests

The TEST > FILTER-T screen is used to check or calibrate the filter temperature sensor located in the air stream beneath the filter tape. When this screen is entered, the BAM will automatically raise the nozzle and turn the pump on. This allows ambient room air to equilibrate the filter temperature sensor. Allow the pump to run for at least 5 minutes to allow the sensor to equilibrate. When fully equilibrated, the filter temperature should match ambient within **+/- 1 deg C**. To calibrate it, enter the ambient room temperature from your reference standard into the REFERENCE field and press the CALIBRATE soft key. The RESET soft key can be used to revert to default calibrations and start over if difficulty is encountered.

Note: Never calibrate this sensor if the BAM inlet heater has been operating recently. The heater causes this sensor to measures higher than ambient. See the notes about equilibrating or removing the filter RH sensor for calibrations below.

7.19 RH Test Menu – Filter Humidity Sensor Test and Calibration

The TEST > RH screen is used to check or calibrate the filter relative humidity sensor located in the air stream beneath the filter tape. The sensor measures the RH of the sample air to control the Smart Inlet Heater system, which turns up or down as needed to maintain the sample near or below the RH setpoint value. See Section 6.9. The filter RH sensor (part 9278) should match ambient RH within +/- 4% when properly equilibrated. If the sensor fails, it usually reads something impossible like -25% or 135% RH.

```
FILTER RH CALIBRATION


      BAM:   32.5 %
REFERENCE:   33.1 %


CALIBRATE    RESET                Exit
```

The FILTER RH Test Screen

Important Equilibration Notes: It is difficult to effectively correlate an ambient RH measurement to the filter RH reading, because the BAM has some self-heating from the Smart Heater which causes the filter sensor to measure significantly lower than ambient RH. For this reason it is usually best to leave the factory default calibration alone, unless you have clear evidence that it needs to be calibrated. *If the filter RH sensor is calibrated without first being fully equilibrated to ambient, it will introduce a large artificial offset*.

For example: The ambient RH is 50%, but the filter RH sensor reads 20% due to inlet heat. If the filter sensor calibration is adjusted to that it matches 50%, this adds a +30% offset to all RH readings. Now the filter RH data values are all 30% too high and it looks like the inlet heater is not functioning and not regulating the sample RH when it actually is. In addition, the inlet heater may run at full power trying to achieve regulation to the setpoint.

To equilibrate the sensor without removing it from the sample stream: Enter the TEST > FILTER RH screen. The BAM will raise the nozzle and turn the pump on to pull room air past the RH sensor. Unplug the inlet heater and allow the BAM to cool completely to room conditions. This might take an hour or more. Position your RH audit device as close as possible to the BAM sample nozzle during calibration.

To remove the sensor from the flow system for calibration: Unplug the inlet heater and remove the BAM case cover. Remove the black 3-port compression manifold from the flow path. It is located under the nozzle motor and holds the two filter sensors. This is easiest with tool 9627 from the BX-308 tool kit. Leave the sensors plugged into the circuit board. Do not touch the RH sensor element because it is ESD sensitive. Move the sensor manifold away from the BAM so that an accurate ambient RH value can be obtained. Enter the TEST > RH menu and allow the sensor to equilibrate for at least five minutes, then compare the BAM RH reading on the display to your reference RH device. To calibrate the sensor, enter the reference value into the BAM display and press CAL to change the BAM value to match.

The RESET key can be used to remove all previous field calibrations from the sensor and restore the default factory calibration. Do not press the CAL key after RESET, or whatever value happens to be in the REFERENCE field will be calibrated.

8 EXTERNAL DATALOGGER INTERFACE SYSTEM

This section describes the configuration of the BAM-1020 to work with a separate, external datalogger. The BAM-1020 provides an analog concentration output voltage along with a clock synchronization input feature which allows unit to function with many analog dataloggers. The BAM-1020 digital data outputs can also be collected with digital dataloggers or automatic digital data acquisition systems. In any case, the BAM-1020 internal digital data logging system still stores the complete data array, which can be collected periodically.

This section describes the BAM-1020 configurations required for external dataloggers. Consult your datalogger documentation for the specific setup requirements for your model. Met One Instruments can also supply technical bulletins describing sample setup programming for several of the more popular types of datalogger.

8.1 Analog Concentration Output Signal

The BAM-1020 analog output type is selectable between voltage output (0-1 or 0-10 volt DC) or isolated current output (4-20 or 0-16 mA). The rear panel dipswitches are used to select the desired output as shown in the table below. The 1-volt voltage output is almost exclusively used for analog data logging applications.

SWITCH	ON	OFF
SW1	0-10 vdc	0-1 vdc
SW2	4-20mA	0-16mA
SW3	Not used	Not used
SW4	Not used	Not used

Important Note: The scale of the output voltage of the BAM-1020 is determined by the RANGE and OFFSET setting. See Section 6.2. In most applications where the OFFSET is set to -0.015, and the RANGE is set to 1.000 mg, the BAM-1020 analog output will be scaled as **0.000v to 1.000v equals -0.015 mg to 0.985 mg.** It is critical that your analog datalogger input is programmed to scale this voltage correctly, or a significant data offset mistake will occur! The BAM digital data should be periodically compared to the analog logger data to ensure correct logger scaling. In addition, the BAM output voltage DAC should be tested as described in Section 7.12 to ensure that the actual voltage output of the BAM matches the expected voltage.

Analog Error Encoding: The analog output is the only voltage channel available between the BAM-1020 and the datalogger, so any errors generated by the BAM are reported using the same voltage signal. The BAM-1020 will set the analog output to its full-scale reading whenever a critical error prevents a valid concentration from being measured. It can optionally set the voltage to full-scale in response to other non-critical alarms as described in section 6.5. The external datalogger should be programmed to recognize a full-scale reading as an error, and not a valid concentration. This method is used because it is rare for an actual concentration reading to exceed the range of the BAM-1020, and if it does, it should be reported as an invalid data point anyway. The digital data values stored in the BAM are always unaffected and available, if the alarm was non-critical and did not prevent the hourly concentration measurement from occurring.

8.2 Early Cycle Mode Option For Analog Data Collection

During a standard BAM-1020 measurement cycle, the unit waits for the beginning of the new hour before it sets the analog output to represent the just-finished hour's concentration. However, some types of dataloggers must have the concentration value available **before** the new hour starts, or the data will be stored in the wrong hour. The BAM-1020 has a special EARLY cycle mode (in the SETUP > INTERFACE menu) which causes the unit to start and finish the measurement a few minutes early in order to output the concentration voltage for the last 5-minutes of the hour which was just sampled. The datalogger must be programmed to read this value during the window. Because of the critical timing involved, the BAM-1020 clock will have to be synchronized to the datalogger clock using the EXT RESET inputs described below. The following describes the timing of the STANDARD and EARLY modes.

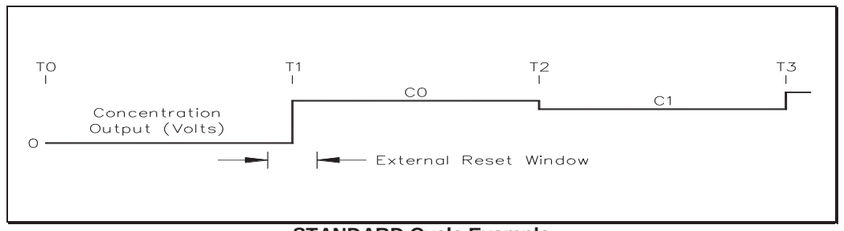

STANDARD Cycle Example

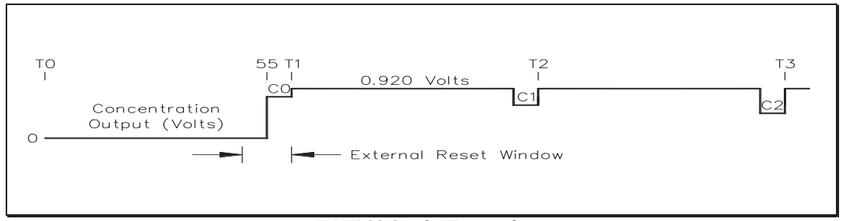

EARLY Cycle Example

Analog Output Levels

C_0 represents the concentration output level measured from time T_0 to T_1, where the T labels represent the top (beginning) of an hour (such as 12:00:00). As you can see, the concentration voltage C_0 for the standard cycle is present for the whole next hour following the measurement. In early mode, the C_0 voltage for the current hour is present for only the last 5 minutes of the hour just-sampled (minute 55 to 60), and all other times the concentration output voltage is fixed at 0.920 volts.

External Reset Windows

An external reset signal may be used to synchronize the BAM-1020 clock to the datalogger. In standard mode the external reset window is plus or minus 5 minutes around the beginning of the hour, but in early mode the external reset window is between minute 50 and 60 only. The BAM clock will not reset if the previous cycle has not finished the I_3 count, and an "E" alarm will be logged. See Section 7.2.

Standard Mode Clock Resets:

Minute 0 to 5:	An external reset signal will change the BAM clock back to the 00:00 of the current hour. If a cycle has already started, it will continue. No error occurs since there is adequate time to complete the cycle.
Minute 5 to 55:	An external reset signal has no effect. The error log will contain the date and time of the "E" alarm reset attempt.
Minute 55 to 60:	If an external reset occurs after a completed cycle (idle condition), then no error occurs. The clock will be set forward to 00:00 of the next hour and a new measurement cycle will start.

EARLY Mode Clock Resets:

Minute 55 to 60:	The external reset signal changes the clock back to minute 55:00 of the current hour. A new measurement cycle will start at that moment. If a cycle has already started, it will continue. No error occurs since there is adequate time to complete the cycle.
Minute 0 to 50:	The external reset signal has no effect. The error log will contain the date and time of the "E" alarm reset attempt.
Minute 50 to 55:	If an external reset occurs after a completed cycle (idle condition), then no error occurs. The clock will be set forward to minute 55:00 of the current hour and a new measurement cycle will start.

8.3 Telemetry and Error Relays

In addition to the analog output voltage, several input and output relay connections are provided on rear panel of the BAM-1020. These can be connected to an external datalogger as a second method of indicating alarms between the BAM and the logger, but in practice most of these relay telemetry connections are rarely used. The function of each input and output is described below.

Note: A **contact-closure input** to the BAM-1020 is achieved by shorting the two terminals on that particular input together, usually with a relay on the external datalogger. The datalogger should not apply any voltage to the terminals. **Contact-closure outputs** from the BAM-1020 are provided by the unit shorting the two terminals together with an internal relay, without applying any voltage or current to them. The external datalogger must then sense the closure. The contacts are rated at 100VDC, 0.5A max. **Normally-Open** means that the relay contacts are not shorted together unless a certain condition occurs, while **Normally-Closed** means that the relay contacts are shorted until the condition occurs, then they open.

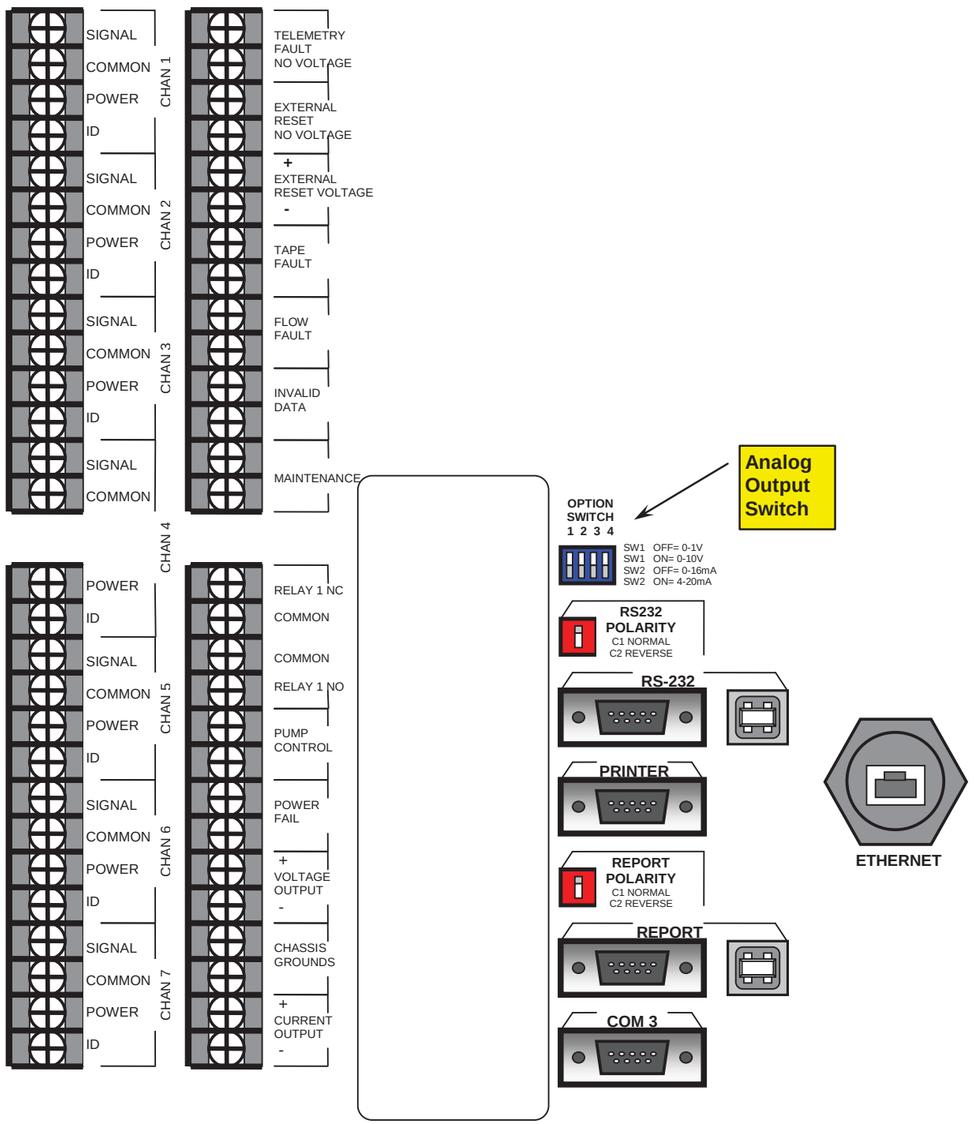

BAM-1020 Back Panel and Relay Connections (Extra Report Processor Digital Outputs Shown)

1. **TELEMETRY FAULT NO VOLTAGE** This input can be used to signal the BAM-1020 that the external telemetry system (datalogger) is not operational. This contact-closure input must be activated for a minimum of 2-seconds. If activated, the BAM will continue to function and will log a “U” error (see section 7.2), and will also activate the INVALID DATA relay output. This input can be set to normally-open or normally-closed in the SETUP > INTERFACE menu. Rarely used.
2. **EXTERNAL RESET NO VOLTAGE** This input can be used to synchronize the BAM-1020 clock to the external datalogger at the top of the hour, and is often used in EARLY cycle mode. This is a contact-closure input which must be activated for a minimum of 2-seconds. The input can be set to normally-open or normally-closed in the SETUP > INTERFACE menu.
3. **EXTERNAL RESET VOLTAGE** This input is the same as above except the input is activated by a TTL logic voltage level instead of a contact-closure. Max 15mA @ 15V or 5mA @ 5V DC. Five-volt logic is typically used for this input.
4. **TAPE FAULT`** This is a contact-closure output which will be activated whenever a “T” tape error is generated by the BAM (see section 7.2). Polarity is normally-open.
5. **FLOW FAULT** This is a contact-closure output which will be activated whenever an “F” flow error is generated by the BAM (see section 7.2). Polarity is normally-open.
6. **INVALID DATA** This is a contact-closure output which will be activated whenever a C, P, N, R, L, I, M, or U error is generated by the BAM (see section 7.2). Polarity is normally-open.
7. **MAINTENANCE** This is a contact-closure output which will be activated whenever a maintenance “M” flag is generated by the BAM (see section 7.2). Polarity is normally-open.
8. **RELAY 1 NC/NO** This relay output is used in dual-unit coarse configurations only. The master BAM outputs a clock synch signal to the external reset input of the slave unit using this output.
9. **PUMP CONTROL** This is the low-voltage output which signals the vacuum pump to turn on or off. There is no polarity on this output because the pump controller has a diode bridge input. Connect the two-wire control cable from the pump to these output terminals.
10. **POWER FAIL** This is a contact-closure output which will be activated (closed) whenever a power failure or an “L” error occurs in the BAM (see section 7.2).
11. **VOLTAGE OUTPUT** This is the BAM analog concentration output voltage connection. See section 8.1. Polarity must be observed on this output.
12. **CHASSIS GROUNDS** These are the earth-ground terminals. These should be attached to a ground rod for best operation of the unit.
13. **CURRENT OUTPUT** This is used when the analog output is needed in current loop form instead of voltage. Typically only used if there is a long distance between the BAM and the datalogger. Output is selectable between 4-20mA or 0-16mA.

8.4 Interfacing a Digital Datalogger with the BAM-1020

Many BAM-1020 users configure an external digital datalogger to retrieve data from the BAM-1020. This typically requires some programming experience with the particular type of digital logger to be used. Several environmental datalogger manufacturers supply pre-made BAM-1020 drivers for basic data collection applications. All digital files from the BAM-1020 must be obtained through the RS-232 port or the newer REPORT serial port, or in some cases from the PRINTER port. The BAM-1020 digital files are described in Section 9.

The most common method is to program the digital logger to request the last hourly comma-separated data record array from the BAM-1020, once per hour, using the RS-232 or REPORT port. In this case, the logger must establish connection with the BAM by sending three carriage returns (ENTER key), then send the **6 (csv report), 4 (last data)** command string just like you might when downloading the data with a computer and a terminal program as described in Section 9.4. The logger must ignore the BAM menu responses, then receive the hourly data array response and parse out the desired data parameters and store them appropriately. The last concentration value, Qtot flow volume, ambient temperature, pressure, filter RH, and alarm bits are often collected in this manner.

CPU Interruptions: Care is required when collecting data from the classic BAM-1020 RS-232 port. The BAM main CPU cannot multitask, so if the unit is moving any of the filter tape or span membrane motors (especially near the top of each hour) it will ignore any RS-232 serial port commands and interrupt any serial data downloads until the mechanical motion is complete. See Section 4. The best solution when using the classic RS-232 port is to program the digital logger to make a single hourly data request to the BAM near the middle of each hour, such as between minute 25 and minute 50. However, small files such as the last hourly record can be downloaded very quickly, and may be accomplished at almost any time during the hour as long as the timing is carefully controlled. If your datalogger is programmed to digitally request data from the BAM-1020 RS-232 port continuously throughout the hour (such as every minute), then some number of the data requests will certainly be ignored by the BAM due to mechanical interrupts.

The BX-965 Report Processor back panel option was designed to allow easier digital data connectivity with the BAM-1020. The REPORT serial port works exactly like the classic RS-232 port and accesses the same files, except that it has its own CPU and memory and cannot be interrupted or ignored. The REPORT port also has much more data memory capacity. The classic RS-232 port and it's legacy functionality is also still supported on Report Processor back panels as a backup.

Clock Timing With Digital Loggers: Timing must also be considered when collection BAM data with a digital system. If the BAM is operating in standard cycle mode, then the digital concentration data values are updated exactly at the top of the hour. If the digital logger is set to collect the BAM concentration value as soon as it is available, then the clocks should be synchronized to prevent collecting the wrong hourly record.

If the logger must have the BAM concentration before the top of the hour, then the BAM can be set for early cycle mode, and the BAM clock will have to be synchronized to the logger. Some BAM-1020 users leave the BAM in standard cycle mode and set their digital logger to synchronize the BAM clock at minute 59 of the hour. This causes the BAM to be one minute ahead of the logger so that the concentration is available at the top of the logger hour. This method is similar to running in early cycle mode, except the timing schedule is much easier to understand.

9 DIGITAL COMMUNICATIONS AND DATA RETRIEVAL

This section describes the methods used to retrieve digital data files through the RS-232 serial communications system on the BAM-1020. The unit has one or more two-way RS-232 serial ports which may be used with a computer, laptop, modem, or digital datalogger. The data can be accessed through the serial ports with a terminal program and a simple menu driven interface, or by using the free Comet software that comes with the BAM.

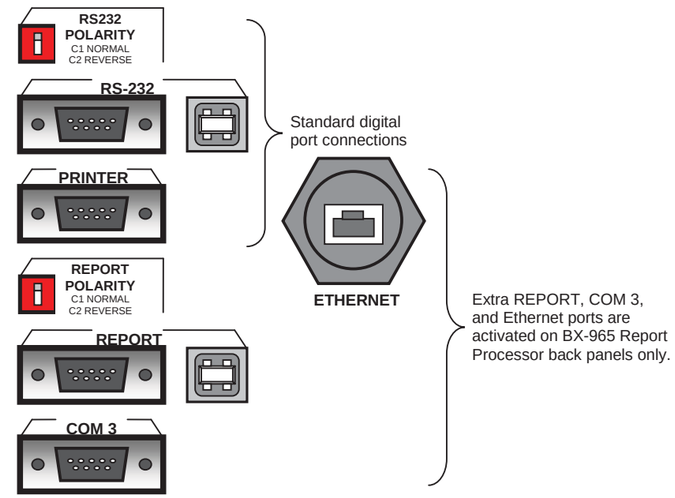

BAM-1020 Back Panel Digital Connections

9.1 Direct Serial Port Connections and Settings

The "RS-232" serial port on the back of the BAM-1020 handles data transfer directly from the BAM CPU, and can be used for less intensive digital collection systems. Units with the newer Report Processor back panel option also have a second REPORT serial port and USB serial converters. The REPORT port has its own file service system which can't be interrupted or ignored by the BAM sample cycle, and should be used whenever available. Both the RS-232 and REPORT ports contain the same data files and are accessed in the same manner. The PRINTER port is output-only and is rarely used. The COM3 port is for connecting two BAMs together in PM-coarse systems only.

Direct Desktop Computer Connections:

The BAM-1020 RS-232 or REPORT port can be directly connected to almost any standard PC that has a COM1 to COM4 serial port available. Connect the port on the back of the BAM-1020 to the COM port connector on the computer with the supplied BAM serial cable (part 400658, female-to-female 9-pin null). **CAUTION:** Do not confuse the parallel printer port or video adapter port on your computer with a serial port.

Direct Laptop Computer Connections:

The BAM-1020 can be connected to most laptop computers. Most older laptops have a regular 9-pin RS-232 serial port, just like a desktop computer. Newer laptops do not usually

have RS-232 ports, so a converter will have to be obtained. The easiest and cheapest type is a USB-to-RS232 serial adapter. Met One recommends the Belkin F5U109, available from Met One or a local electronics store. You will still need the Female-to-Female 9-pin RS-232 cable. Certain laptops occasionally have difficulty communicating through this type of adapter.

Another option is an RS-232 serial PCMCIA card, such as the Quatech SSP-100 which installs in an expansion card slot in the laptop and provides a serial port for the BAM. This type of adapter is very reliable, but more expensive and takes longer to install and configure. See www.quatech.com for more information.

BAM-1020 units with the optional Report Processor back panel have USB data ports which can be connected to the USB port on the laptop with an appropriate cable. Met One can supply drivers for the computer to allow it to communicate with the BAM in this manner. Note: This is exactly the same as using a USB-to-serial converter cable, except that the converter is built into the BAM.

Communication Settings:

The BAM-1020 communicates at 9600 Baud, 8 data bit, no parity, one stop bit. The default 9600 baud rate may be changed to a faster setting for downloading large BAM data files, but in any case, the terminal program baud rate must match the BAM baud setting. **NOTE: The BAM-1020 user interface must be in the main top-level menu or OPERATE menu before any communication can be established through the RS-232 port.** The LCD display and keypad on the BAM-1020 are disabled whenever RS-232 communication with the CPU is in progress. The optional REPORT port does not have these limitations. If unable to communicate, try changing the RS-232 Polarity switch on the back of the BAM-1020. This swaps the polarity of the TX and RX lines (pins 2&3) and functions as a null modem.

9.2 Using Met One Comet Communications Software

Each BAM-1020 is supplied with a free copy of **Comet**™ utility software from Met One Instruments. Comet is a communications terminal program which can retrieve data from the BAM-1020 directly or through a modem. The CD contains complete instructions. The Comet program is very simple and easy to use and can be mastered quickly without having to navigate any of the BAM terminal menus described in section 9.3 and 9.4 below.

Install the program on your computer, then run it from the programs directory. You will have the option to select a previously saved station, or to create a new station. If you want to create a new station, then Comet can auto scan for any BAM units connected to the computer serial ports, or you can manually set up a new station connection. If Comet finds one or more instruments during an auto scan, then you can select the instrument and enter a station name and a phone number if desired. The following window will appear:

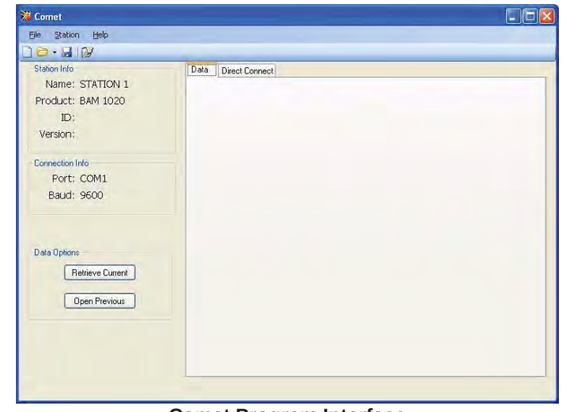

Comet Program Interface

Click the “Retrieve Current” button. A window will appear to select which data files you want to retrieve, and to select if you want all data from the BAM or only new data since last download. Press Retrieve to collect and save the selected files.

In addition, the Comet program has a “Direct Connect” tab which allows you to optionally access the ASCII menu system and data files from the BAM exactly as you would when using a terminal program as described in section 9.4 below.

9.3 Downloading Data Using Simple Terminal Programs

The BAM-1020 data can be easily downloaded through the serial ports using HyperTerminal® or other simple terminal programs. Nearly all PCs have the HyperTerminal program already included. The following describes how to set up the program with the BAM-1020:

1. Connect the RS-232 or REPORT port on the back of the BAM to your computer or laptop using the appropriate cable. Connect to the COM1 serial port if available.
2. Open HyperTerminal. (Usually located in the Programs\Accessories\Communications directory). The program will ask you to type a name for the connection. Type “BAM-1020” or a name of your choice, then click “OK”.
3. The “Connect To” window will open. Select COM1 (or another port if used) from the drop-down menu in the “Connect Using” field. Click “OK”. Note: You can also set up the program to dial the BAM through a modem in this window.
4. The “COM1 Properties” window will open. Set the following values in the drop-down menus, then click “Apply” and “OK”.

Bits per second:	**9600**
Data bits:	**8**
Parity:	**None**
Stop bits:	**1**
Flow control:	**None**

5. The main HyperTerminal connection window should now be open. Press the ENTER key three times. The window should respond with an asterisk (*) indicating that the program has established communication with the BAM-1020.

6. Once communication is established, press the **h** key. This should cause the BAM-1020 System Menu to appear on the window as shown below. You can now send any of the ASCII characters in the menu to retrieve the desired files. The menu options are described in the following section.
7. HyperTerminal will only display 100 lines of data in the window. To capture larger files (such as All Data), first select Transfer > Capture Text from the drop-down menu. Select a location for the file, then click the “Start” button. Retrieve the desired files, and HyperTerminal will automatically store them to the text file. Anything that comes through the terminal window will be saved to the file. Click the ”Stop” button to stop capturing the text.
8. When you exit HyperTerminal, it will ask if you want to save your connection. Click “Yes” and a file named BAM-1020.ht will be created in the HyperTerminal folder, which will have all of the settings saved. Use this for future communications with the BAM.

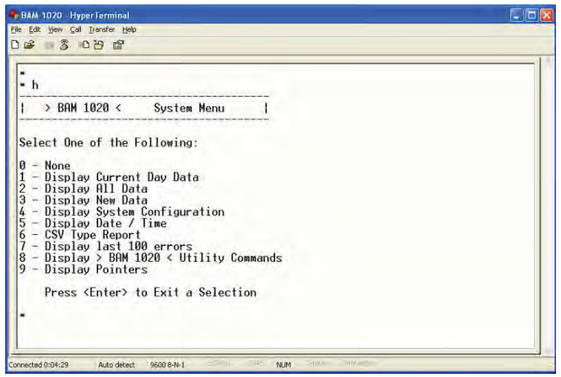

Terminal Window showing BAM-1020 menu

9.4 System Menu and File Descriptions Using a Terminal Program

Once a serial connection between a terminal program and the BAM-1020 has been established as shown above, you will have access to the main BAM-1020 System Menu. Each number 0-9 represents a different data file you can download from the unit. Each file is described below. To get the desired file, simply press the appropriate number on your keyboard. **Note:** After a few minutes, the BAM will stop waiting for a command and you will have to press ENTER three times to reestablish the asterisk command prompt, then send another **“h”** to refresh the menu. If you already know the number of the file you want, you can skip the H menu altogether.

Files 1, 2, and 3: Current Day Data, All Data, New Data:

These files are simple text views, and are for easy visual checks of the data only, because it is difficult to import these into a spreadsheet for analysis. An example of the data format is shown below. File 1 Current Data is data from the current day only. File 2 All Data is all of the data in the BAM separated into daily blocks. File 3 New Data is all data since the last download, also in daily blocks. A data pointer is set in the BAM indicating where the last download stopped. See Section 9.8.

The first data column is the time, followed by a series of dashes which represent error or alarm bits. If an error occurred, a letter representing the error will appear in this field. For this example, at 7:00 am an **“L”** error (power failure) occurred. Then at 8:00 an **“M”** error was logged, indicating that the operator was performing maintenance that hour.

The next column is the concentration. The Qtot column is total flow volume for the hour. With a flow rate of 16.7 L/min and a sample time of 50 minutes, this value will be about .834 m^3 per hour. With a sample time of 42 minutes this value will be about 0.701 m^3 per hour. The remaining six columns are the six datalogger inputs on the BAM. In this example RH was logged on channel 4, and Ambient Temperature was logged on channel 6. The other four channels had nothing attached, but will appear in the array anyway. The data shown on the unused channels is only noise.

Report for 04/22/2005 - Day 112 > BAM 1020 < Station ID: 1

Channel			01	02	03	04	05	06
Sensor	Conc	Qtot	WS	no	WS	RH	WS	AT
Units	mg/m3	m3	KPH	V	MPS	%	KPH	C
01:00 ----------	0.010	0.834	019.6	0.012	000.3	00017	132.2	008.7
02:00 ----------	0.009	0.834	019.9	0.012	000.3	00018	132.1	007.4
03:00 ----------	0.011	0.834	019.8	0.012	000.3	00018	132.1	006.5
04:00 ----------	0.011	0.833	020.0	0.012	000.3	00018	132.1	006.1
05:00 ----------	0.012	0.833	019.8	0.012	000.3	00018	132.1	005.3
06:00 ----------	0.011	0.834	020.1	0.012	000.3	00018	132.0	005.6
07:00 ----L------	0.995	0.000	020.3	0.012	000.3	00018	132.0	007.4
08:00 ---M------	0.995	0.000	019.8	0.012	000.3	00017	132.1	009.4
09:00 ----------	0.008	0.833	019.9	0.012	000.3	00015	132.2	012.5
10:00 ----------	0.003	0.834	019.5	0.012	000.3	00014	132.2	016.2
11:00 ----------	0.007	0.833	019.5	0.012	000.3	00013	132.2	019.7
12:00 ----------	0.011	0.833	019.5	0.012	000.3	00012	132.0	020.7
13:00 ----------	0.008	0.833	019.1	0.011	000.3	00010	132.0	021.9
14:00 ----------	0.010	0.833	019.2	0.011	000.3	00010	131.9	022.3
15:00 ----------	0.020	0.833	019.1	0.011	000.3	00011	132.0	020.9
16:00 ----------	0.011	0.834	019.3	0.011	000.3	00012	132.1	018.7
17:00 ----------	0.010	0.833	019.5	0.012	000.3	00012	132.2	017.9
18:00 ----------	0.010	0.833	019.4	0.012	000.3	00012	132.1	017.1
19:00 ----------	0.010	0.834	019.4	0.012	000.3	00014	132.2	015.3
20:00 ----------	0.007	0.833	019.6	0.012	000.3	00015	132.1	014.4
21:00 ----------	0.006	0.834	019.5	0.012	000.3	00017	132.1	013.3
22:00 ----------	0.006	0.834	019.7	0.012	000.3	00021	132.0	011.2
23:00 ----------	0.005	0.833	019.6	0.012	000.3	00023	132.0	010.0
00:00 ----------	0.011	0.834	019.9	0.012	000.3	00017	132.2	009.5
Savg	0.009	0.833	019.7	0.012	000.3	00015	132.1	013.2
Vavg	0.000	0.000	000.0	0.000	000.0	00000	000.0	000.0

Data Recovery 100.0 %

File 1 Current Day data text file example

File 4: Display System Configuration (BAM Settings File):

This file contains a list of the BAM-1020 settings and calibration values. This is useful for verifying the setup parameters on the BAM-1020, or to send to the factory if service is required. Following is an example of the File 4 settings report. Older revisions of BAM firmware may display a slightly different report format than the one shown below.

```
BAM 1020 Settings Report
06/07/2007  14:19:45
     Station ID, 1
       Firmware, 3236-02 3.2.5
              K, 01.000
           BKGD, 00.000
            usw, 00.301
            ABS, 00.805
          Range, 1.000
         Offset, -0.015
          Clamp, -0.015
     Conc Units, mg/m3
      Conc Type, ACTUAL
             Cv, 01.000
             Qo, 00.000
      Flow Type, ACTUAL
     Flow Setpt, 0016.7
       Std Temp, 25
      Temp Mult, 1.0000
      Pres Mult, 1.0000
      Flow Mult, 1.0000
High Flow Alarm, 20
 Low Flow Alarm, 10
      Heat Mode, AUTO
       Heat OFF, 20
        RH Ctrl, YES
       RH SetPt, 35
         RH Log, YES
        DT Ctrl, NO
       DT SetPt, 99
         DT Log, NO
     BAM Sample, 42
     MET Sample, 60
    Cycle Mode, STANDARD
 Fault Polarity, NORM
 Reset Polarity, NORM
   Maintenance, OFF
  EUMILRNFPDCT
  000000000000
            AP, 000150
     Baud Rate, 9600
 Printer Report, 2
            e3, 00.000
            e4, 15.000

       Channel,       1,       2,       3,       4,       5,       6,
     Sensor ID,     255,     255,     255,     255,     255,     255,
    Channel ID,     255,     255,     255,     255,     255,     255,
          Name,   XXXXX,   XXXXX,   XXXXX,   XXXXX,   XXXXX,   XXXXX,
         Units,     XXX,     XXX,     XXX,     XXX,     XXX,     XXX,
          Prec,       0,       0,       0,       0,       0,       0,
      FS Volts,   1.000,   1.000,   1.000,   1.000,   1.000,   1.000,
          Mult,   1.000,   1.000,   1.000,   1.000,   1.000,   1.000,
        Offset,   0.000,   0.000,   0.000,   0.000,   0.000,   0.000,
   Vect/Scalar,       S,       S,       S,       S,       S,       S,
     Inv Slope,       N,       N,       N,       N,       N,       N,
```

File 4 System Configuration (Settings) file example

File 5: Display Date / Time:

This file command will show the date and time of the BAM-1020 real-time clock.

File 6: CSV Type Report:

The CSV data menu is commonly used for BAM data retrieval through terminal programs. The 6 command will respond with the sub-commands shown below. The data values in each file are separated by commas. This allows the text file to be opened directly by spreadsheets.

This is the recommended data retrieval method. Be sure to capture text when downloading large files if using HyperTerminal. The CSV reports are also often used when BAM data is downloaded by an external digital datalogger. Following is a list of the sub-files available in CSV format. Sub files 5, 6, 7, and 8 are flow diagnostics files and are rarely used.

2 – Display All Data	**(All data records in the BAM)**
3 – Display New Data	**(Data records since last download)**
4 – Display Last Data	**(Previous hour's data only)**
5 – Display All Flow Stats	(All flow stats files)
6 – Display New Flow Stats	(Flow stats since last download)
7 – Display All 5 Min Flow	(5 minute averages of all flow stats)
8 – Display New 5-Min Flow	(5 min averages of flow stats since last download)
9 – Display Error Log	**(Error/alarm log showing sub-categories)**

Example of a CSV report of the "LAST DATA" record (File 6 sub-file 4):

The following example shows a typical CSV download of the file 6,4 last data record from the BAM-1020, such as might be retrieved by an external digital datalogger on an hourly basis. This file download does not reset the data pointer.

1. A series of three carriage returns is sent to the BAM through the serial port. The BAM responds with a single asterisk (*) indicating that communication is established.
2. An ASCII character "6" is sent to the BAM requesting the file 6 CSV menu. The BAM responds with the CSV menu options as shown below, ending with ">".
3. An ASCII character "4" is sent to the BAM, requesting file 4 "Display Last Data". The BAM responds with the Station ID number, then the header info, then the data record.

The data includes date/time stamp, concentration for the last hour (CONC), Flow volume for last hour (Qtot), then all six individual met sensor channels. The labels for these channels will vary, but will always appear in the data array regardless if used or not. In this example the six channels start with "WS" and end with "AT". At the end of the array are twelve error bits, each representing a different possible error. "0" indicates no error of that type, and "1" indicates an error.

```
* 6
CSV Type Reports

2 - Display All Data
3 - Display New Data
4 - Display Last Data

5 - Display All Flow Stats
6 - Display New Flow Stats

7 - Display All 5-Min Flow
8 - Display New 5-Min Flow

>4 - Display CSV Data
Station,  5
Time,Conc(mg/m3),Qtot(m3),WS(MPS),WD(DEG),BP(mm),RH(%),Delta(C),AT(C),E,U,M,I,L,R,N,F,P,D,C,T
01/30/08 16:00,  0.084, 0.834, 0.0,0,0,30,57.0,27.1,0,0,1,0,0,0,0,0,0,0,0,1,
```

Example of CSV last data report

Example of a CSV report of the "NEW DATA" records (File 6 sub-file 3):

The following example shows a typical CSV download of the file 6,3 new data records form the BAM-1020, such as might be done for routine data collection using a local computer or modem. The file contains all of the data record since the last download, and resets the data pointers. See Section 9.8.

1. A series of three carriage returns is sent to the BAM through the serial port. The BAM responds with a single asterisk (*) indicating that communication is established.
2. An ASCII character "6" is sent to the BAM requesting the file 6 CSV menu. The BAM responds with the CSV menu options as shown below, ending with ">".
3. An ASCII character "3" is sent to the BAM, requesting file 3 "Display New Data". The BAM responds with the Station ID number, then the header info, then the data records.

The data starts at the first record since last time it was retrieved. In this example, the MET SAMPLE was set to log the array every 15 minutes.

```
* 6
CSV Type Reports

2 - Display All Data
3 - Display New Data
4 - Display Last Data

5 - Display All Flow Stats
6 - Display New Flow Stats

7 - Display All 5-Min Flow
8 - Display New 5-Min Flow

>3 - Display CSV Data
Station,  5
Time,Conc(mg/m3),Qtot(m3),WS(MPS),WD(DEG),BP(mm),RH(%),Delta(C),AT(C),E,U,M,I,L,R,N,F,P,D,C,T
10/02/07 17:45,  0.001, 0.700, 0.110,0,0,36,1.3,23.0,0,0,0,0,0,0,0,0,0,0,0,0,
10/02/07 18:00,  0.001, 0.700, 0.127,0,0,38,1.4,23.2,0,0,0,0,0,0,0,0,0,0,0,0,
10/02/07 18:15,  0.001, 0.700, 0.130,0,0,38,1.2,23.6,0,0,0,0,0,0,0,0,0,0,0,0,
10/02/07 18:30,  0.001, 0.700, 0.110,0,0,36,1.1,23.5,0,0,0,0,0,0,0,0,0,0,0,0,
10/02/07 18:45,  0.001, 0.700, 0.110,0,0,37,1.2,24.0,0,0,0,0,0,0,0,0,0,0,0,0,
10/02/07 19:00,  0.003, 0.700, 0.127,0,0,38,1.1,24.6,0,0,0,0,0,0,0,1,0,0,0,0,
10/02/07 19:15,  0.003, 0.700, 0.129,0,0,38,1.1,24.8,0,0,0,0,0,0,0,0,0,0,0,0,
10/02/07 19:30,  0.003, 0.700, 0.109,0,0,37,0.9,24.0,0,0,0,0,0,0,0,0,0,0,0,0,
```

Example of CSV new data report

Note: *The user can delete the menu characters from the beginning of the text file, leaving only the data header row and the data records, then save the text file. The file extension can then be changed from .txt to .csv to change the file format into one that can be directly opened by a spreadsheet. Each data parameter should then appear in its own column of the spreadsheet.*

CSV Reports of Flow Statistics and 5-Min Flow Files:

The flow statistics fields available in the CSV menu are described below. These files are not available except on BAM units configured as FEM $PM_{2.5}$ units. A BX-596 sensor is required. The flow statistics files are typically used for diagnostics only.

Field	Description
Start	Start time of BAM sample period.
Elapsed	Elapsed BAM sample time.
Flow	Average flow rate for the BAM sample period.
CV	Flow rate coefficient of variance for the BAM sample period.
Volume	Sample volume for the BAM sample period.
Flag	Flow regulation out of range warning flag.
AT	Average ambient temperature for the BAM sample period.
AT Min	Minimum ambient temperature for the BAM sample period.
AT Max	Maximum ambient temperature for the BAM sample period.
BP	Average ambient pressure for the BAM sample period.
BP Min	Minimum ambient pressure for the BAM sample period.
BP Max	Maximum ambient pressure for the BAM sample period.

The 5 minute flow statistics averages are described below. These files are not available except on BAM units configured as FEM $PM_{2.5}$ units. A BX-596 sensor is required.

Field	Description
Time	Event time stamp in seconds since January 1, 1970 00:00:00
Flow	5 Minute average flow rate for the BAM sample period.
AT	5 Minute average ambient temperature for the BAM sample period.
BP	5 Minute average ambient pressure for the BAM sample period.

File 7: Display Last 100 Errors (Error Log):

This file contains the date, time, and a description of each of the last 100 errors logged by the BAM-1020, in text format. This file reports the 12 main alarm categories only, but not the sub-categories showing the more specific alarm cause. For this reason, the csv error log file should be used instead (file 6 sub-file 9). This file should be downloaded to identify the exact sub-category of any errors or alarms which are not immediately evident.

File 8: Display BAM-1020 Utility Commands:

This file contains a list of ASCII commands can be sent to the BAM-1020 through the serial port to configure certain parameters or to perform advanced diagnostics. Most of these commands will not be used by the typical operator unless instructed by a factory technician. Some of these commands require a password to access. The password is the same as the F-

key sequence used to enter SETUP screens (default password is **1 2 3 4**). The functions are shown in the table below.

Command	Command Function
a	**Printer Port Output Configuration.** This sets what is output on the printer port. Sending this command will prompt the following sub-menu: 1 – Printer Port (default). 2 – Standard Diagnostic Port. 3 – Factory Diagnostic Port. 4 – Comma Separated Data Output Port.
c	**Clear Data Memory.** This serial command erases all stored data from memory! Password required.
d	**Set Date.** This sets the date on the unit. Password required.
e	**Display Hex EEPROM Setup Values.** This displays the special memory locations where the setup values are stored. Diagnostic only.
f	**Factory Calibration Test.** This is used for factory calibration only!
h	**Display System Menu.** This is the command used to access the data downloading menu options. Become familiar with this command.
i	**Display ID Values.** This command displays the ID codes of the met sensors for diagnostic purposes.
m	**Display Hex Data Memory Values.** This command displays the data memory locations for diagnostic purposes.
p	**Modify Modem Pointer.** Factory use only.
q	**Display Station ID.** This command displays the preset station ID number.
t	**Set Time.** This command sets the time on the unit. Password required.
b	**XMODEM Data Download**. This command allows binary data transfer of the unit memory. Download only. Requires software handshaking. For use with special software only, not terminal programs. Advanced use only.
r	**XMODEM Real-Time Value Download.** This command is only used by special software to scan instantaneous values of sensors, alarms and settings. Requires software handshaking. Advanced use only.
x	**XMODEM EEPROM Value Download.** This command allows quick scanning of non-volatile memory for diagnostic purposed. Advanced use only.
z	**Enable concentration report to PRINTER output.** This command configures the printer port to output a fixed-width concentration report at the end of the sample period. For external loggers. Available in firmware 3.2 or later only.

File 9: Display Pointers:

This file is a display of the current status of the data storage memory. The current pointer position and number of full memory locations is shown. Rarely used.

9.5 Printer Output Port Functions

The Printer port on the back of the BAM-1020 is an output-only RS-232 serial interface which may be used with a serial printer or as a diagnostic output to a computer. The printer port output can be configured by using the "**a**" utility command through the main RS-232 port. (See section 9.4) The output may be set for data printouts, fixed-width data output, or one of two diagnostic modes. Diagnostic modes are not used except by a factory technician.

A configuration has been added for the printer port which enables it to output a fixed-width concentration report at the end of the sample period, which can be used to interface to a serial data logger. This output is enabled by using the **"z"** utility command through the serial port. The output format is date, time, concentration, and flow volume as shown below.

Format in mg/m3 is: **mm/dd/yy hh:mm:ss,+99.999,+9.999**
Format in µg/m3 is: **mm/dd/yy hh:mm:ss,+999999,+9.999**

If the BAM is set to STANDARD cycle mode, the output will occur at the top of the next hour. For example, if a measurement is made over hour 2, then the format would be:

03/28/07 03:00:00, +00.027,+0.834

If the BAM is set to EARLY cycle mode, the output will occur at minute 55:00 for the current hour. For example, if a measurement is made over hour 2, then the format would be:

03/28/07 02:55:00, +00.027,+0.834

9.6 Modem Option

The Met One Instrument BX-996 modem is recommended for use with the BAM-1020, as it is designed to reliably communicate when other modems may not. If a different modem is used, it must be set in "dumb terminal" mode or equivalent because the BAM does not support handshaking with the modem. Note: the RS-232 Polarity switch on the back of the BAM-1020 may need to be set to REVERSE polarity for communication using the modem.

If you are using one of the Met One Instruments data acquisition programs such as MicroMet Plus, AirPlus, or Comet you need only enter the telephone number of the site in the system setup menu of the program. Multiple telephone numbers can be entered for connection to multiple remote sites. After connection, the data collection is the same as it would be with a direct serial connection to the BAM.

If you are communicating with a terminal program such as HyperTerminal® or ProComm Plus® you will need to define the serial port configuration in the setup of the program. Set the baud rate to 9600, with 8 data bits, no parity, and 1 stop bit. Use the terminal program's internal dialing command sequence to dial up the BAM-1020. Verify the connection to the BAM-1020 by pressing the <Enter> key at least three times until the command prompt asterisk (*) appears. If not, verify the cabling and communications settings. Once connected, the access to the BAM-1020 is the same ASCII menu driven interface as used for the direct PC connection.

9.7 BAM-1020 Firmware Upgrades

The BAM-1020 has a system of one or more firmware (embedded software) programs located in one or more EEPROM chips that control the operation of the unit. There are also several different possible versions of these firmware programs depending on the intended configuration of the unit.

The BAM-1020 CPU board in all units runs at least the main instrument control firmware program (part number 3236-X), which can be updated through the RS-232 port. The optional BX-965 Report Processor back panel board has its own firmware (part number 80353-X), which can be updated through the REPORT port. The optional BX-970 touch screen display has its own software based on Windows CE (part number 80596), which can be updated by installing an update flash drive in a USB port inside the front door on these touch screen units. The following is a basic table of the different firmware programs:

Part Number	Ver/Rev Series	Description
3236-02	V 3.X.X (and earlier)	PM10-only firmware for main CPU. Units without touch screen.
3236-05	V 3.X.X	PM2.5 FEM (USA type) firmware for main CPU. Units without touch screen.
3236-06	V 3.X.X	PM-Coarse FEM firmware for main CPU. Units without touch screen.
3236-07	V 5.X.X	PM10 & PM2.5 EU (Euro type) firmware for main CPU. Units without touch screen.
3236-55	V 4.X.X	PM2.5, PM10, & Coarse FEM (USA type) firmware for main CPU, units with touch screen only.
3236-77	V 5.X.X	PM2.5 & PM10 EU (Euro type) firmware for main CPU, units with touch screen only.
80353-1	V 1.X.X	BX-965 Report Processor firmware, older units with HC11 processor only
80353-3	R 2.X.X	BX-965 Report Processor firmware, units with HC12 processor, all units except touch screen.
80353-4	R 2.X.X	BX-965 Report Processor firmware, for all units with BX-970 touch screen.
80596	V 2.X.X	BX-970 Touch Screen panel PC software.

Warning! The compatibility and interactivity of these various firmware programs is complex. Some firmware versions and/or revisions are incompatible with others, and upgrading one program may require upgrading other programs in order to maintain compatibility. Please contact Met One technical service in order to ensure that you have the correct files before attempting to upgrade any firmware.

The BAM-1020 has the capability for flash firmware upgrades through the serial ports. Flash updates allow the field operator to easily reprogram the main EEPROM firmware to the latest revision through the serial port using the Flash Update Utility. Units which currently run firmware revision 3.0 or later already have a flash compatible EEPROM. If the unit has old revision 2.58 or earlier firmware, then you will need to physically replace the EEPROM chip with a flash compatible chip available from Met One.

You will need a computer or laptop with an RS-232 (9-pin) serial COM port and the standard BAM serial cable that came with the unit. Laptops without a 9-pin COM port will need a reliable USB-to-RS-232 converter, or a USB cable can be used if your BAM has the USB converter port on the back. Do not update the firmware over a modem.

Note: The main BAM-1020 operating system firmware is always updated through the standard RS-232 port only. The Report Processor back panel option has its own EEPROM, its own processor, and its own memory. The Report Processor firmware can be flash updated through the REPORT port, in a similar manner to the main BAM firmware.

Warning! Take great effort to ensure that the power source to the BAM-1020 will not be interrupted during the flash firmware update process! A power interruption may cause the firmware to become inoperative, and the unit will have to be returned to the factory!

Before the flash firmware update:

- Download and save all BAM-1020 data and error logs. These files will be erased from memory during the upgrade process!
- Download the BAM-1020 settings file, or at least record your current settings in the SETUP > SAMPLE and SETUP > CALIBRATE screens. Note: If the BAM already has revision 3.2 or later firmware, then none of the settings or calibrations should be affected by the update process.
- Set the BAM baud rate to 9600 for the flash update process.

Flash Update Process:

1. A Met One technician will probably e-mail you a link to the FTP file server site where the current Firmware Update Utility program is located. It will look something like the following:

   http://metoneftp.com/service/Firmware_Upgrades/BAM-1020%20Firmware/BAM%201020%20Firmware%20Installer%20PM2.5%203236-05%20V3.4.3.exe

2. Click on the link or paste it into your internet browser address bar. After a moment the following download window should appear:

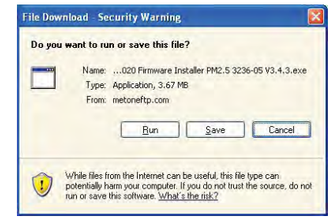

   You can run the executable installer program if this is the same computer you plan to use to update the BAM unit, otherwise click “Save” and save the installer to the hard drive or to a removable drive that you can use to transfer the file to the computer you plan to use for the update.

3. Transfer the executable installer file to the appropriate computer if needed, then run the .exe program to extract and install the Firmware Update Utility. The installer will guide you through the installation steps.

4. Connect the COM port of the computer (usually COM 1) to the **RS-232** port on the BAM-1020 with the standard BAM serial cable. The BAM-1020 should be set to 9600 baud in the SETUP menu. The BAM must be powered on and displaying the main menu screen.

5. From the Windows Start menu, go to *Programs/Met One/BAM 1020/BAM 1020 Firmware Installer* to run the Firmware Update Utility program as shown below. Press Y and the Enter key to proceed. The program will then prompt you for the COM port number. Enter the number (usually 1) and press the Enter key to begin the update process.

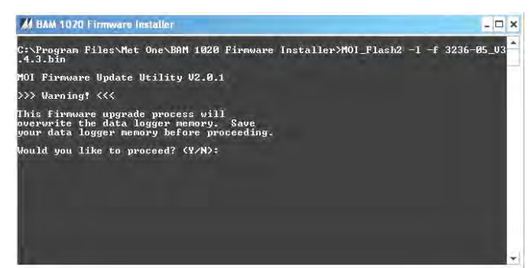

6. Execution time is approximately 12 minutes. Do not disconnect the serial cable or power during this time. The BAM display will show a warning screen during the update. If the main menu is still displayed, then the update is not occurring. Check the

BAM baud rate, serial cable connections, and polarity switch. A “Done!” message will be displayed in the computer window at the end of the update process.

After the flash firmware update:

- Check or set the BAM baud rate back to the desired rate for regular data collection.
- Reset the calibration of the filter temperature and filter RH sensors. Default and then recalibrate the ambient temperature, pressure and flow in the TEST > FLOW screen. **Note:** *Sometimes false field calibration values can end up in these parameters as a result of firmware updates, and they must be cleared out for proper BAM operation.*
- Check and verify the settings in the SETUP > SAMPLE and SETUP > CALIBRATE screens to ensure that they are still correct. It is always good practice to review all settings after any firmware update.

9.8 Resetting the Data Pointer for New Data Collection

The BAM-1020 sets a data pointer when data files are retrieved. The pointer indicates the last data record collected, so that next time “new data” is retrieved, only data back to that pointer is sent. This prevents collecting redundant data and needlessly large files. It is sometimes helpful to be able to manually reset this pointer back to a specific record if it becomes incorrectly set, such as if a modem hangs up in the middle of a download. BAM firmware rev 3.2.6 and later allows the data pointer to be manually reset by sending an escape command through the serial port. Note: The REPORT port on the optional Report Processor back panel uses different pointer reset commands. See the BX-965 manual.

The reset command is **<esc>FH<cr>** where **<esc>** is the esc key. F is the desired file number of **3** (data log file), **6** (flow stats file), or **8** (5-min flow file). H is the number of hours back from current to set the pointer (1 to 9999). **<cr>** is the enter key.

For example, sending **<esc>3 24<cr>** through the RS-232 port would set the data pointer of the main BAM data memory back to 24 hours ago.

9.9 Data Collection Using the Query Output or Bayern-Hessen Protocol

BAM-1020 units equipped with revision 3.6.3 or later firmware are capable of outputting the custom Query digital data array. European units with revision 5 series firmware are compatible with the Bayern-Hessen data protocol. The format of the Query or BH data array outputs is determined by the user-selected parameters in the SETUP > QUERY menu as described in Section 6.10. **Note:** The Query output can only be accessed through the REPORT serial port on the optional BX-965 Report Processor back panel.

Bayern-Hessen “BH” Protocol:
The Bayern-Hessen protocol is used to support certain European data networks. The complete protocol is not described in this manual, but is available a separate technical document. The primary difference between the Query and the BH data configurations is that the BH protocol does not support the time/date field used in the Query array, but the BH protocol does support a diagnostic stability field which is not accessible with the Query array.

In addition, the BH protocol can only accommodate eight alarm types (0-7) instead of the standard twelve, so some of the alarm states are grouped together. The BH protocol also supports eight real-time status bits to indicate which part of the sample cycle is in progress.

Custom Query Output:
The Query output is provided to allow easier configuration of digital datalogger and more flexibility in the BAM-1020 digital output array. The Query output array is set to include only the desired parameters in the desired order, and is accessed with a simple escape command sequence. This eliminates much of the work associated with programming a digital data logger to establish a command prompt, navigate the classic digital menu system, and parse out multiple unused data parameters.

No command prompt must be established with the BAM-1020 as with the classic digital menu access commands. Only the <Esc> escape character (hex 1B) or the <STX> character (hex 02) followed by the desired Query file and a carriage return (enter). The resulting Query output from the BAM will consist of the last data record in the BAM memory, in comma-separated format. The available Query commands are listed below:

Escape Command	Description
<Esc> QC <enter>	Custom Query output. Data is formatted exactly as specified in the SETUP > QUERY screen. All values are in comma separated format, with a fixed width of 7 characters per field excluding commas.
<Esc> QCH <enter>	Data header for the custom Query output.
<Esc> Q <enter>	Standard Query output. Data array configured exactly like the standard csv last data output (menu 6,4) regardless of the Query setup screen. All values are in comma separated format, with a fixed width of 6 characters per field excluding commas.
<Esc> QH <enter>	Data header for the standard Query output.

An example of one possible QCH (custom array header) and QC (custom Query array) command are shown below. Each escape command is followed by the response from the BAM-1020:

```
<Esc>QCH
TIME,CONC(mg/m3),FLOW(lpm),AT(C),BP(mmHg),RH(%),REF(mg),ERRORS,*4348

<Esc>QC
07/06/10 13:22, 0.0230,   16.7,  23.6,   761,   26, 0.8160,   0,*3129
```

An example of the QH and Q commands is shown below. This mirrors the familiar csv last data output of the BAM-1020, and ignores the user set format of the custom Query array:

```
<Esc>QH
Time,Conc(mg/m3),Qtot(m3),WS(KPH),WS(MPS),WS(MPS),RH(%),Delta(C),AT(C),E,U,M,I,L,R,N,F,P,D,C,T,*6451

<Esc>Q
07/06/10 15:00, 0.023, 0.701,  0.8,  0.8,  0.8,   26,  8.6,  23.6,0,0,0,0,0,0,0,0,0,0,0,0,0,*4224
```

If the error status is included in the custom Query array (QC), it will appear as a decimal error code as shown below. Each decimal code value corresponds to one of the twelve regular BAM-1020 error or alarm types as described in Section 7.2.

Decimal Code	Error Flag	Description
0	none	No error
1	**T**	Tape System Errors
2	**C**	Beta Count Error
4	**D**	Deviant Membrane Density Alarm
8	**P**	Pressure Drop Alarm

16	**F**	Flow Errors
32	**N**	Nozzle Error
64	**R**	Reference Error, Membrane Timeout
128	**L**	Power Failure
256	**I**	Internal Error, Coarse Link Down
512	**M**	Maintenance Flag
1024	**U**	Telemetry Fault
2048	**E**	External Reset Error

A data integrity checksum is included at the end of each Query array, after the delimiter asterisk character '*'. The checksum is the 16-bit arithmetic sum of all characters in the line up to but not including the asterisk.

Note: Digital dataloggers may be programmed to use the <STX> (hex 02) character instead of the <ESC>, to prevent the echoing of the command back to the logger.

10 ACCESSORIES and PARTS

10.1 Consumables, Replacement Parts, and Accessories

The following parts are available from Met One for maintenance, replacement, service, and upgrades. If unsure about a part you need, please contact the Service department and provide the serial number of your BAM-1020. Some of these parts require technical skills or special considerations before use or installation.

Consumables

Description	Part Number	Graphic
Filter Tape Roll, Glass Fiber, 60+ days per roll 30mm x 21m	**460130**	
Cotton-Tipped Applicators, nozzle cleaning, 100 pack Solon #362	**995217**	
Silicone O-Ring Grease, mini packets	**995712**	

Calibration & Service Tools

Description	Part Number	Graphic
BAM-1020 Basic Service Tool Kit: Includes nozzle shims, reel spacer, filter sensor removal tool, dark test shim, rubber leak check tool, hex wrenches.	**BX-308**	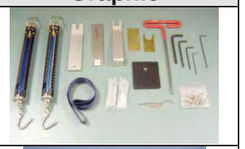
BAM-1020 Distributor Service Tool Kit: Includes all of the above plus two spring scales.	**BX-308-1**	
BAM Inlet Cleaning Kit Includes pull-rope, tube brush, microfiber rags, cleaning brushes, o-ring grease, cotton applicators. For cleaning inlet tube and PM10, PM2.5 inlets.	**BX-344**	
Nozzle Adjustment Shim Kit. 8235/8236 Shims Only.	**BX-310**	
Rubber Leak Test Nozzle Seal Tool	**7440**	
Span Membrane Assembly, Standard Replacement Approx 0.800 mg/cm2	**8069**	
Span Membrane Assembly, Mid-Range Approx 0.500 mg/cm2	**BX-301**	
Flow Inlet Adapter Kit (Leak Test Valve) Includes short inlet tube adapter.	**BX-305**	

Zero Filter Calibration Kit, with leak check valve. Required for PM2.5 FEM monitoring. Same as BX-305 but with 0.2 micron filter.	**BX-302**	
Volumetric Flow Calibration Kit (BGI deltaCal™) Flow, Temp, and Pressure Reference Standards Met One recommended flow meter	**BX-307**	

Vacuum Pumps & Pump Parts

Description	Part Number	Graphic
Pump, Medo, 115 VAC, 50/60 Hz, Low Noise	**BX-126**	
Pump, Medo, 230 VAC, 50/60 Hz, Low Noise	**BX-127**	
Pump, Gast, Rotary Vane, 100/115 VAC, 50/60 Hz	**BX-121**	
Pump, Gast, Rotary Vane, 220/240 VAC, 50/60 Hz	**BX-122**	
Muffler, Medo/Gast Pump, Replacement	**580293**	
Gast Pump Rebuild Kit. Vanes, filters.	**680828**	
Medo Pump Rebuild Kit, Piston, filters	**680839**	
Pump Service Kit, Filter Replacement, Medo	**8588**	
Pump Controller (Relay Module Only) Medo/Gast	**BX-839**	

Flow System Components

Description	Part Number	Graphic
Flow Sensor, Mass, 0-20 LPM, Internal Assembly	**80324**	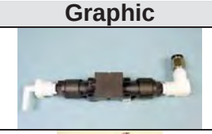
Automatic Flow Controller	**BX-961**	
Filter Assembly, Pisco In-line	**580291**	
Filter Element Only, Pisco In-line	**580292**	
Filter Temperature and RH Sensor Kit	**BX-962**	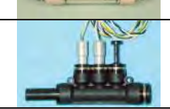
Filter RH Sensor Replacement Only	**9278**	
Filter Temperature Sensor Replacement Only	**9279**	
Nozzle, Stainless Steel, Replacement Part	**8009**	
Nozzle Spring, Replacement	**2998**	
O-Ring, Nozzle	**720066**	
Nozzle Rebuild Kit, with parts and tools	**80355**	
O-Ring, Inlet Tube Receiver, 2 required.	**720069**	

O-Ring Kit, Inlet Tube Receiver and Nozzle.	**9122**	
Pump Tubing, Clear, 10mm O.D., 6.5mm I.D. Polyurethane, 25 foot roll standard	**960025**	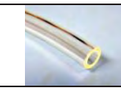

Electrical & Electronic Parts

Description	Part Number	Graphic
LCD Display, 8x40 Character, Backlit	**2823**	**Contact Technical Service for Circuit Board Replacement Information.**
Circuit Board, Keypad Interface	**2960-2**	
Circuit Board, CPU	**3230-8**	
Circuit Board, Board Stack Interface	**3250-1**	
Circuit Board, Rear Panel Interconnect, Standard	**3260-1**	
Circuit Board, Rear Panel, Report Processor Version	**80350**	
Circuit Board, AC Motor Driver	**3110-2**	
Circuit Board, High Voltage	**3150-1**	
Front Door Assembly, BAM-1020 Standard Version	**9628**	
Fuse, 3.15A, 250V, 5x20mm, 2 Required	**590811**	
Motor, with gear box, 4 RPM. 4 per unit.	**8105-1**	
Motor, with gear box, 10 RPM, Capstan Drive Only.	**8106-1**	
Power Supply Assembly, 115 VAC, 60 Hz	**BX-115**	
Power Supply Assembly, 115 VAC, 50 Hz	**BX-116**	
Power Supply Assembly, 230 VAC, 60 Hz	**BX-230**	
Power Supply Assembly, 230 VAC, 50 Hz	**BX-231**	
Power Supply Assembly, 100 VAC, 60 Hz	**BX-100**	
Power Supply Assembly, 100 VAC, 50 Hz	**BX-101**	
40W Switching Supply Only, With Wire Harness	**80315**	

Inlet Components

Description	Part Number	Graphic
PM10 Size-Selective Inlet Head, EPA Specified	**BX-802**	
TSP Sampling Inlet, with insect screen	**BX-803**	
PM2.5 Sharp Cut Cyclone	**BX-807**	
PM2.5 Very Sharp Cut Cyclone, BGI Inc. VSCC™ Required for PM2.5 FEM monitoring	**BX-808**	
PM2.5 WINS Impactor	**BX-804**	

Inlet Roof Mounting Kit, with waterproof roof flange, inlet tube and braces. 8 foot inlet tube standard.	**BX-801**	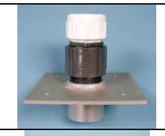
Inlet Tube Coupler Assembly, with o-rings Connects two inlet tubes together Inlet tube sold separately	**BX-821**	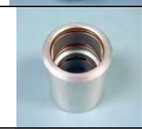
Inlet Tube Extension Kit, 4 foot, with coupler and tube	**BX-822**	
Inlet Tube Extension Kit, 8 foot, with coupler and tube	**BX-823**	
Inlet Tube, Aluminum, 8 foot length standard	**8112**	
Inlet Tube, Custom Length Dash number is length in feet, 8' max per tube	**8112-X**	
Smart Heater Option, 115 VAC	**BX-827**	
Smart Heater Option, 230 VAC	**BX-830**	
Smart Heater Upgrade Kit, 115VAC	**9307**	
Smart Heater Upgrade Kit, 230VAC	**9308**	
O-Rings, BX-807 SCC Cyclone, set of 6	**720097**	
O-Rings, BX-808 VSCC Cyclone, set of 8	**720105**	
O-Rings, PM10 Head, set of 3	**8965**	

Meteorological Sensors

Description	Part Number	Graphic
590 Wind Direction Sensor, Auto ID	**BX-590**	
591 Wind Speed Sensor, Auto ID	**BX-591**	
592 Ambient Temperature Sensor, Auto ID	**BX-592**	
592 Room/Shelter Temperature Sensor, Auto ID	**BX-592-1**	
593 Ambient Relative Humidity Sensor, Auto ID	**BX-593**	
594 Ambient Barometric Pressure Sensor, Auto ID	**BX-594**	

595 Solar Radiation Sensor, Auto ID	**BX-595**	
596 AT/BP Combo Sensor, -40 +55C. 596-1 AT/BP Combo Sensor, -50 +50C. 596+ AT/BP/RH Combo Sensor, -50 +70C.	**BX-596** **BX-596-1** **BX-596+**	
Real-Time Module (RTM) Instantaneous particulate mass trending option	**BX-895**	

Communications Options & Accessories

Description	Part Number	Graphic
Touch Screen Display Option. Complete Front Door Assembly for BAM-1020.	**BX-970**	
Report Processor kit. Complete back panel assembly or plug-in board. **Call Met One for upgrade details**. Required for PM-Coarse Configuration.	**BX-965**	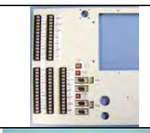
Modem Kit for BAM-1020	**BX-996**	
Cellular/IP Modem Kit for BAM-1020	**BX-911**	
BAM-1020 Serial Cable, DB-9 Female Ends, Null.	**400658**	
Belkin F5U109 USB-to-RS-232 Adapter	**550067**	
Serial Printer Kit	**BX-601**	
Converter for Parallel Printers	**BX-602**	

Weatherproof Mini Shelters/Enclosures

Description	Part Number	Graphic
Mini Enclosure, Heated and Vented. Mfg by Shelter One	**BX-902B**	
Mini Enclosure, Heated and Air Conditioned. Mfg by Ekto. 2000 BTU A/C.	**BX-903**	
Mini Enclosure, Heated and Air Conditioned. Mfg by Ekto. 4000 BTU A/C.	**BX-904**	
Enclosure, Dual Unit, Heated and Air Conditioned. Mfg by Ekto. 4000 BTU A/C.	**BX-906**	

10.2 BX-500 Series Meteorological Sensor Configurations

The BAM-1020 has six channels of inputs available on the back of the unit for data logging external sensors. The BX-500 Series sensors are a set of meteorological sensors designed for direct compatibility with these channels. The sensors each have an auto-identification (ID) signal wire with a voltage unique to that type of sensor. When one of these sensors is attached to the BAM, the unit senses this ID voltage and automatically configures the channel with all the correct scaling parameters. **The ID MODE for the desired channel must be set to AUTO in the SETUP > SENSORS menu in order for the unit to identify the sensor**. See Section 6.8 for details about setting up the channels in the BAM-1020. The scaling and setup values of the series BX-500 sensors are shown in the chart below.

Temperature Input for Flow Control: The ambient temperature signal used for BAM-1020 flow control must always be connected to channel six. BAM-1020 units are equipped with at least a BX-592 ambient temperature sensor. If the BAM is configured as a $PM_{2.5}$ FEM monitor, then the BX-596 sensor is required. This is a combination ambient temperature and barometric pressure sensor which attaches to channels six (AT) and seven (BP) for actual flow control and flow statistics. *The channel 7 pressure signal is not logged in the standard BAM data arrays*. In order to log the barometric pressure from the BX-596, you must jumper the channel 7 signal terminal over to another unused channel input with a short wire. Then you must manually scale the second channel with the multiplier, offset, and full scale voltage of the BX-596 as shown below. BX-596-1 is an special extended range version for very low temperature or high altitude locations. BX-596+ has an additional ambient RH signal and extended ranges on the other parameters.

500 Series Sensor Setup Parameters

Model	Type	Units	Range	Mult	Offset	FS Volts	S/V	Inv Slope	ID Voltage
BX-590	**WD**	Deg	0 to 360	360	0	1.0	**V**	N	1.10v
BX-591	**WS**	mph	0 to 100	100	0	1.0	S	N	0.20v
		m/s	0 to 44.704	44.70	0	1.0	S		
BX-592	**AT**	^{0}F	-22 to +122	144	-22	1.0	S	N	1.80v
		^{0}C	-30 to +50	80	-30	1.0	S		
BX-593	**RH**	%	0 to 100	100	0	1.0	S	N	2.10v
BX-594	**BP**	inHg	20 to 32	6	26	1.0	S	N	2.60v
		mmHg	508.0 to 812.8	152.40	660.40	1.0	S	N	
		mbar	677.1 to 1083.6	203.19	880.46	1.0	S		
BX-595	**SR**	Ly/ min	0 to 2	2	0	1.0	S	N	3.70v
		W/M2	0 to 2000	2000	0	1.0	S		
BX-596	**AT**	^{0}C	-40 to +55	95	-40	2.5	S	N	3.50v
	BP	mmHg	525 to 825	300	525	2.5	S		
BX-596-1	**AT**	^{0}C	-50 to +50	100	-50	2.5	S	N	4.10v
	BP	mmHg	400 to 825	425	400	2.5	S		
BX-596+	**AT**	^{0}C	-50 to +70	120	-50	2.5	S	N	4.20v
	BP	mmHg	375 to 825	450	375	2.5	S		
	RH*	%	0 to 100	100	0	2.5	S		

* The RH signal from the BX-596+ sensor may optionally be connected to an unused met channel. These setup parameters must be manually entered by the user in the SETUP > SENSOR screen for the selected channel.

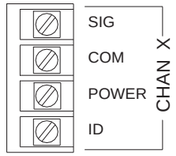

BAM-1020 Back Panel Met Sensor Input Terminal

BX-500 Series Met Sensor Wiring Connections for BAM-1020

BX-590 Wind Direction Sensor	
Terminal Block	**Cable Wire Color**
SIG	Yellow
COM	Black/Shield
POWER	Red
ID	Green

BX-591 Wind Speed Sensor	
Terminal Block	**Cable Wire Color**
SIG	Yellow
COM	Black/Shield
POWER	Red
ID	Green

BX-592 Ambient Temp Sensor	
Terminal Block	**Cable Wire Color**
SIG	Yellow
COM	Black/Shield
POWER	Red
ID	Green

BX-593 Relative Humidity Sensor	
Terminal Block	**Cable Wire Color**
SIG	Yellow
COM	Green/Shield
POWER	White
ID	Red

BX-594 Barometric Pressure Sensor	
Terminal Block	**Cable Wire Color**
SIG	White
COM	Black/Shield
POWER	Red
ID	Yellow

BX-595 Solar Radiation Sensor	
Terminal Block	**Cable Wire Color**
SIG	Yellow
COM	Black/Shield
POWER	Red
ID	Green

BX-596 Temperature/Baro Combo Sensor	
Terminal Block	**Cable Wire Color**
Channel 6 SIG	Yellow (AT)
Channel 6 COM	Black/Shield
Channel 6 POWER	Red
Channel 6 ID	Green
Channel 7 SIG	White (BP)

BX-596+ Temp/Baro/RH Combo Sensor	
Terminal Block	**Cable Wire Color**
Channel 6 SIG	Yellow (AT)
Channel 6 COM	Black/Shield
Channel 6 POWER	Red
Channel 6 ID	Green
Channel 7 SIG	White (BP)
Channel 1-3 SIG*	Blue (RH)

* The BX-596+ RH signal can be connected to any unused met channel, typically 1, 2, 3, or 5. It must be manually scaled. The BX-596 BP signal must be connected to unlogged channel 7, but may be jumped to another unused channel for logging.

Sensor Physical Mounting:

The BX-500 series sensors typically mount near the top of the BAM-1020 inlet tube with a supplied short cross-arm and/or related hardware. The sensors can also be mounted to a separate nearby tripod, such as Met One model 905. Wind sensors must be mounted to avoid any possible wind obstructions caused by the BAM inlet components.

11 THEORY OF OPERATION and MATHEMATICAL ANALYSIS

When the high-energy electrons emanating from the radioactive decay of ^{14}C (carbon-14) interact with nearby matter they loose their energy and, in some cases, are absorbed by the matter. These high-energy electrons emitted through radioactive decay are known as beta rays and the process is known as beta-ray attenuation. When matter is placed between the radioactive ^{14}C source and a device designed to detect beta rays, the beta rays are absorbed and/or their energy diminished. This results in a reduction in the number of beta particles detected. The magnitude of the reduction in detected beta particles is a function of the mass of the absorbing matter between the ^{14}C beta source and the detector.

The number of beta particles passing through absorbing matter, such as dust deposited on a filter tape, decrease nearly exponentially with the mass through which they much pass. Equation 1 shows this relationship.

Equation 1

$$I = I_0 e^{-\mu x}$$

In Equation 1, I is the measured beta ray intensity (counts per unit time), of the attenuated beta ray (dust laden filter tape), I_0 is the measured beta ray intensity of the un-attenuated beta ray (clean filter tape), μ is the absorption cross section of the material absorbing the beta rays (cm^2/g), and x is the mass density of the absorbing matter (g/cm^2).

Equation 1 very closely resembles the Lambert-Beers Law, which is used in spectrometric analysis. Just as the Lambert-Beers Law is an idealization of what is actually observed, Equation 1 is also an idealized simplification of the true processes occurring meant to simplify the corresponding mathematics. However, experimental measurement shows that in properly designed monitors, such as the BAM-1020, the use of this equation introduces no substantial error.

Equation 1 may be rearranged to solve for x, the mass density of the absorbing matter. This is shown in Equation 2.

Equation 2

$$-\frac{1}{\mu}\ln\left[\frac{I}{I_0}\right] = \frac{1}{\mu}\ln\left[\frac{I_0}{I}\right] = x$$

In practice, the absorption cross section is experimentally determined during the calibration process. Once I and I_0 are experimentally measured, it is a simple matter to calculate x, the predicted mass density.

In practice, ambient air is sampled at a constant flow rate (Q) for a specified time Δt. This sampled air is passed through a filter of surface area A. Once x, the mass density of collected particles, has been determined, it is possible to calculate the ambient concentration of particulate matter ($\mu g/m^3$) with Equation 3.

Equation 3

$$c\left(\frac{\mu g}{m^3}\right) = \frac{10^9 A(cm^2)}{Q\left(\frac{liter}{min}\right)\Delta t(min)\mu\left(\frac{cm^2}{g}\right)}$$

In Equation 3, c is the ambient particulate concentration ($\mu g/m^3$), A is the cross sectional area on the tape over which dust is being deposited (cm^2), Q is the rate at which particulate matter is being collected on the filter tape (liters/minute), and Δt is the sampling time (minutes). Combining these equations yields to the final expression for the ambient particulate concentration in terms of measured quantities. This is shown in Equation 4.

Equation 4

$$c\left(\frac{\mu g}{m^3}\right) = \frac{10^9 A(cm^2)}{Q\left(\frac{liter}{min}\right)\Delta t(min)\mu\left(\frac{cm^2}{g}\right)}\ln\left(\frac{I_0}{I}\right)$$

The key to the success of the beta attenuation monitor is due in part to the fact that μ, the absorption cross-section, is almost insensitive to the nature of the matter being measured. This makes the BAM-1020 very insensitive to the chemical composition of the material being collected.

It is instructive to perform a conventional propagation of errors analysis on Equation 4. Doing so, one can develop an equation for the relative measurement error (σ_c/c) as a function of the uncertainty in each of the parameters comprising Equation 4. This leads to Equation 5.

Equation 5

$$\frac{\sigma_c}{c} = \sqrt{\frac{\sigma_A^2}{A^2} + \frac{\sigma_Q^2}{Q^2} + \frac{\sigma_t^2}{t^2} + \frac{\sigma_\mu^2}{\mu^2} + \frac{\sigma_I^2}{I^2\ln\left[I/I_0\right]^2} - \frac{\sigma_{I_0}^2}{I_0^2\ln\left[I/I_0\right]^2}}$$

Inspection of Equation 5 reveals several things. The relative uncertainty of the measurement (σ_c/c) is decreased (improved) by increasing the cross sectional area of the filter tape (A), the flow rate (Q), the sampling time (t), the absorption cross-section (μ), I and I_0.

In practice, the uncertainty associated with the filter area (σ_A/A), may be minimized by ensuring that the tape is in exactly the same position during the I_0 measurement as in the I measurement phase. Careful design of the shuttle and tape control mechanisms inside of the BAM-1020 results in minimal error here.

The uncertainty in the flow rate (σ_Q/Q) may be minimized by properly controlling the flow of the instrument. For BAM-1020 units with a manual flow valve, this value is on the order of $\pm$ 3%. For BAM-1020 units equipped with the mass flow controller device, (σ_Q/Q) decreases to $\pm$ 1%.

The relative error due to the uncertainly in the absorption cross section (σ_μ/μ), is due to its slight variation as a function of the chemical composition of the matter being monitored. Generally, this relative error is on the order of ± 2-3%, with judicious selection of the calibrated value of μ.

The uncertainty associated with the measurement of I and I_0 has to do with the physical nature of the process leading to the emission of beta particles from the decay of ^{14}C. This process follows Poisson statistics. Poisson statistics show the uncertainty in the measurement of I (σ_I/I) and I_0 (σ_{I0}/I_0) are minimized by increasing the sampling time. Mathematical analysis shows that doubling the sampling time and hence the measured intensity of I or I_0 will reduce the uncertainty of the measurement by a factor of 1.41 (square root of 2).

11.1 Converting Data Between EPA Standard and Actual Conditions

As described in this manual, the BAM-1020 can obtain concentration data using either actual or standard values for ambient temperature and pressure. In some cases, it is necessary to convert past concentration data collected in standard conditions to actual conditions, or the other way around. Note: temperature is in degrees Kelvin (C+273) and pressure is in mmHg.

Equation 6

$$C_{std} = C_{amb} * (P_{std} / P_{amb}) * (T_{amb} / T_{std})$$

Equation 6 can be used to calculate the standard concentration (C_{std}) from the ambient concentration (C_{amb}) data using ambient barometric pressure and temperature data (P_{amb} and T_{amb}) from the same time period in which the ambient concentration was recorded. P_{std} and T_{std} are the values of standard barometric pressure and standard ambient temperature. These values are usually the EPA mandated 760 mmHg and 298 degrees Kelvin (25 C). **Note:** Some other countries use different values for standard temperature and pressure.

Equation 7

$$C_{amb} = C_{std} * (P_{amb} / P_{std}) * (T_{std} / T_{amb})$$

Equation 7 can be used to calculate the ambient concentration (C_{amb}) from the standard concentration (C_{std}) data using the ambient temperature and pressure. It is necessary to have access to valid data for the ambient temperature and pressure for the desired sample hour in order to be able to make the calculations.

Example: You have a data value of 27µg from a BAM which was configured to report data in EPA Standard conditions (298K and 760 mmHg), but you need to know what the concentration would have been in actual conditions. The actual average temperature for the hour in question was 303K and the average pressure was 720mmHg.

$$C_{amb} = C_{std} * (P_{amb} / P_{std}) * (T_{std} / T_{amb})$$
$$C_{amb} = 27 * (720/760) * (298/303)$$
$$C_{amb} = 27 * 0.9474 * 0.9835$$
$$\mathbf{C_{amb} = 25.1\ \mu g}$$

BAM-1020 Audit Sheet

Model: BAM-1020 **Serial Number:** _____

Audit Date: _____ **Audited By:** _____

Flow Audits			
Flow Reference Standard Used:	Model:	Serial No:	Calibration Date:
Temperature Standard Used:	Model:	Serial No:	Calibration Date:
Barometric Pressure Standard Used:	Model:	Serial No:	Calibration Date:

Leak Check Value: as found: _____ lpm as left: _____ lpm

		BAM	Ref. Std.		BAM	Ref. Std.	
Ambient Temperature:	as found:	C	C	as left:	C	C	N/A ☐
Barometric Pressure:	as found:	mmHg	mmHg	as left:	mmHg	mmHg	
Flow Rate (Actual Volumetric):	as found:	lpm	lpm	as left:	lpm	lpm	N/A ☐
Flow Rate (EPA Standard):	as found:	slpm	slpm	as left:	slpm	slpm	N/A ☐

Mechanical Audits

Pump muffler unclogged:	as found ☐	as left ☐		PM10 particle trap clean:	as found ☐	as left ☐	N/A ☐
Sample nozzle clean:	as found ☐	as left ☐		PM10 drip jar empty:	as found ☐	as left ☐	N/A ☐
Tape support vane clean:	as found ☐	as left ☐		PM10 bug screen clear:	as found ☐	as left ☐	N/A ☐
Capstan shaft clean:	as found ☐	as left ☐		PM2.5 particle trap clean:	as found ☐	as left ☐	N/A ☐
Rubber pinch rollers clean:	as found ☐	as left ☐		Inlet tube water-tight seal OK:	as found ☐	as left ☐	
Chassis ground wire installed:	as found ☐	as left ☐		Inlet tube perpendicular to BAM:	as found ☐	as left ☐	

Analog Voltage Output Audit N/A ☐

DAC Test Screen	BAM Voltage Output	Logger Voltage Input
0.000 Volts	Volts	Volts
0.500 Volts	Volts	Volts
1.000 Volts	Volts	Volts

Membrane Audit

LAST m (mg):	
ABS (mg):	
Difference (mg):	
% Difference:	

Flow Control Range

Flow Setpoint	BAM Flow
15.0 LPM	
16.7 LPM	
18.4 LPM	

Setup and Calibration Values

Parameter	Expected	Found	Parameter	Expected	Found	Parameter	Expected	Found
Clock Time/Date			FLOW TYPE			AP		
RS232 baud			Cv			FRl		
STATION #			Qo			FRh		
RANGE			ABS			Password		
BAM SAMPLE			µ sw			Cycle Mode		
MET SAMPLE			K Factor			RH Control		
OFFSET			BKGD			RH Setpoint		
CONC UNITS			STD TEMP			Datalog RH		
COUNT TIME			HEATER			Delta-T Control		
FLOW RATE			e1			Delta-T Setpoint		
CONC TYPE			Errors			Datalog Delta-T		

Last 6 Errors in BAM-1020 Error Log

Error	Date	Time	Error	Date	Time
1			4		
2			5		
3			6		

Audit Notes: _____

Manual Notes:

MODEL SASS™ & SuperSASS™ $PM_{2.5}$ AMBIENT CHEMICAL SPECIATION SAMPLERS

FIELD OPERATION MANUAL

Document No. SASS-9800 Rev G.

U.S. ENVIRONMENTALPROTECTION AGENCY
NATIONAL CONTRACT
AMBIENT CHEMICAL SPECIATION SAMPLER CANDIDATE
68-D-98-048

December 27, 2001

Met One Instruments, Inc
1600 Washington Blvd.
Grants Pass, Oregon 97526
Telephone 541-471-7111
Facsimile 541-471-7116

Regional Service
3206 Main St. Suite 106
Rowlett, Texas 75088
Telephone 972-412-4715
Facsimile 972-412-4716

Copyright Notice

MODEL SASS™ & SuperSASS™
$PM_{2.5}$ AMBIENT CHEMICAL
SPECIATION SAMPLERS

© Copyright 2001 Met One Instruments, Inc. All Rights Reserved Worldwide. No part of this publication may be reproduced, transmitted, transcribed, stored in a retrieval system, or translated into any other language in any form by any means without the express written permission of Met One Instruments, Inc.

Technical Support

Should you require support, please consult your printed documentation to resolve your problem. If you are still experiencing difficulty, you may contact a Technical Service representative during normal business hours—7:30 a.m. to 4:00 p.m. Pacific Standard Time, Monday through Friday.

Voice: (541) 471-7111

Fax: (541) 471-7116

E-Mail: service@metone.com

Mail: Technical Services Department
Met One Instruments, Inc.
1600 Washington Boulevard
Grants Pass, OR 97526

SASS/SuperSASS OPERATORS MANUAL
TABLE OF CONTENTS

1.0 General Information 3
- 1.1 Introduction 3
- 1.2 Specifications 3
- 1.3 Technical Description 4
- 1.4 Sampler Configuration Options 18
- 1.5 Sampling Head 19

2.0 Siting and Installation 21
- 2.1 Siting 21
- 2.2 Tripod 21
- 2.3 Sampling Head Installation 22
- 2.4 Control unit & Mounting 23
- 2.5 Ambient Temperature Sensor Installation 24
- 2.6 Canister Installation 24
- 2.7 Pump Box Mounting 26
- 2.8 System Grounding 27

3.0 Setup and Operating Procedures 28
- 3.1 Operational Checkout of System 28
- 3.2 Programming of System 30
- 3.3 Preparation for Test Sequence 33
- 3.4 Sample QA/QC Procedures 39

4.0 Microprocessor Menus and Screens 41
- 4.1 Main Screen 41
- 4.2 Event Menu 42
- 4.3 Setup Menu 52
- 4.4 Calibration Menu 57
- 4.5 Transfer Data 61
- 4.6 Error and Warning Screens 62

5.0 Sampler Options 63
- 5.1 Hand-Held Data Transfer Module 63
- 5.3 Flow Rate Transfer Standard 63
- 5.4 Accessory Communications Items 63

6.0 Maintenance, Calibration, Troubleshooting 64
- 6.1 Maintenance 64
- 6.2 System Leak Check 65
- 6.3 Calibration 67
- 6.4 Troubleshooting 72

7.0 References & Additional Reading 73

AMBIENT $PM_{2.5}$ CHEMICAL SPECIATION SAMPLERS
MET ONE MODELS "SASS™ & SuperSASS™"

1.0 GENERAL INFORMATION

1.1 Introduction

The manual covers both the operation of the Met One Instruments, SASS™ (Speciation Air Sampling System) and the second generation of the SASS™ called SuperSASS™. SASS™ and SuperSASS™ are trademarks of Met One Instruments, Inc. The SuperSASS includes all of the operating benefits of the SASS plus expanded sampling canister stations, and the addition of sequential programming in groups of sample collection canisters. The SASS and SuperSASS have developed from the field tests performed by the US-EPA and the suggestions of our customers. The term SASS will be used in this manual to identify basic concepts used in the SASS and the SuperSASS. SuperSASS will be used to identify specific features or details of the SuperSASS.

The SASS (Speciation Air Sampler System) chemical sampler was developed under contract from the United States Environmental Protection Agency – US-EPA by Met One Instruments. The SASS collects samples for the chemical and gravimetric analysis of ambient air $PM_{2.5}$ particles. $PM_{2.5}$ refers to those airborne particles with diameters smaller than 2.5 µm. These particles are comprised of sulfates, nitrates, organic carbon, soot-like carbon and metals. With the recently enacted fine particle standard for $PM_{2.5}$, the US-EPA has mandated a new sampling network for determining the concentration of each of these species. The SASS has been specifically designed to meet these needs.

The measurement techniques for the different chemical constituents, including semi-volatile components such as nitrates, have been developed through special sampling programs[1-3]. These studies have shown that different sampling techniques are required for analyzing the different chemical constituents of $PM_{2.5}$. Met One Instruments has worked closely with the US-EPA and with potential end users to develop the SASS and the SuperSASS in order to comply with government regulations but to also incorporate features which the end user is likely to find desirable. These features include portability, and a design, which allows collection of samples without the user having to handle either the sample filter or the denuder.

1.2 Specifications

The basic SASS accommodates up to five (5) sampling canisters while the SuperSASS accommodates eight (8) sampling canisters used in groups of up to four. The SASS has active flow control on canisters 1 thru 3 with canisters 4 and 5 using a critical orifice for flow setting. The SuperSASS can operate in groups, each with active flow control. In both systems, each individual canister has its own $PM_{2.5}$ sharp cutoff cyclone inlet; denuder ring and tandem 47 FRM filter holders. As such, each canister contains all necessary components for excluding particles above 2.5 µm, for removing interfering gases, and for collecting ambient fine particles.

The canisters are mounted in a wind aspirated radiation shield that maintains sampler temperature close to ambient. Inlets are approximately 72 inches above the ground. There are no transport lines or plenums ahead of the canisters. The sample flow rate is controlled at a flow

rate of 6.7 L/min per canister depending on filter media and denuder material pressures. The critical orifice channels are set for 6.9 L/min of the SASS.

The $PM_{2.5}$ separation is produced by a sharp cut cyclone (SCC)[4] that removes both solid and liquid coarse particles with equal efficiency without the use of impaction grease or oil. Particle penetration through the SCC mimics the $PM_{2.5}$ cutoff curve of the WINS impactor as defined by the Environmental Protection Agency[5]. The denuders are of a multi-cell configuration. They are 25 mm in length, and are housed in a 47-mm O.D. aluminum sleeve. The nitric acid denuder is made of aluminum with 350 parallel, hexagonal channels, and is coated with Magnesium oxide, Empty sleeves are provided for use in canisters and flow channels operated without a denuder.

The filter size (media) used in the sample canister is 47 mm O.D. Each canister can hold either one or two 47-mm filters in tandem. The collection media used for each cassette can be varied as needed for the types of analyses to be performed. The filter holders are FRM design specified and interchangeable with all commercially available FRM samplers.

The solar and heat radiation shield is of the design used for the maintenance of the samples at near ambient temperature. Both the sample filter and ambient temperatures are logged throughout the sampling period. The filter temperature is measured immediately downstream of the filter media in each canister of the SuperSASS and at canister #1 of SASS.

The SASS makes use of three active volumetric flow controllers to provide precise flow control. The SuperSASS is standard with four active volumetric flow controllers. Additionally, each sampling line has a check valve to shut off the flow if the sampling line is not used, or for performing a dynamic field leak check. Volumetric flow rate measurement is made independently for each of the active flow channels, displayed instantaneously and logged with five-minute averages. Flow rate errors are flagged both on the display and in the data logger. Volumetric flows are measured and recorded with four independent electronic mass flow sensors. The mass flow sensors in conjunction with ambient temperature, and the barometric pressure readings, are used by the control unit microprocessor to calculate the actual volumetric flow. This provides site-specific flow measurements so no correction is needed in the field or for data reporting at true volumetric readings.

All routine maintenance can be done in the field. Sample canisters are transported to the laboratory for inspection, cleaning and changing of sampling substrates. Every element of the sampler that is contacted by the sampled air stream ahead of the filter, including the inlet can be cleaned with each sample change. This approach eliminates the typical inlet line and plenum related contamination problems. Samplers employing sample lines and plenums upstream of the filter are prone to contamination and unreliable results.

1.3 Technical Description

The SASS sampler is shown in Figure 1.1. Ambient air enters each of the selected active canisters mounted within the solar radiation shield. Particles larger than 2.5 µm aerodynamic diameter are removed by the cyclonic inlet mounted with each canister. Remaining $PM_{2.5}$ particles are collected on the filter media installed within each canister. Canisters may be equipped with a diffusion denuder ahead of the filter to remove selected gaseous compounds.

The SASS was designed with individual sharp cut cyclone inlets. This approach minimizes the chance for contamination and significantly reduces the required field maintenance of the unit.

Table 1.1. Specifications for the SuperSASS Ambient Chemical Speciation Aerosol Sampler

Analytes:	$PM_{2.5}$ mass and trace metals $PM_{2.5}$ organic and elemental carbon $PM_{2.5}$ sulfate, nitrate and other ions $PM_{2.5}$ elements
Number of Canisters:	SASS = Five (5), SuperSASS = Eight (8) maximum
Sample Flow Rate:	6.7 Liters/minute ± 2% per canister (active flow controlled channels) 6.9 Liters/minute per canister (critical orifice channels)
Inlet:	Sharp cut cyclone (SCC), (D_{50} 2.5µm AED) Detachable from Canister
Denuders:	Multicell, magnesium oxide, sodium carbonate, citric
Filter size:	47 mm OD typical FRM filter
Filters per canister	One or two in series
Plenum:	None
Transport Lines	None
Logged Parameters	Ambient temperature, °C (-30 to 50) Filter temperature, °C (-30 to 50) Sample start date and time, Sample stop date and time Status of Sampler, Flags Volumetric flow rates (L/m), and Volume (m^3/hr)
Logging Interval	5 minute averaging
Support Stand	Tripod with mounting feet and mast.
Solar radiation	Shield, 20” Diameter. x 12”H, Wind Aspirated
Control Box	NEMA Environmental Enclosure 14”L x 14”W x 19.5”H including mounting base.
Pump	Two head diaphragm vacuum, 110/60AC
Power	110AC/60 Hz input to pump system and fan 12 VDC
Ambient Temp	(-30 to 50°C) Bead thermocouple in naturally aspirated radiation shield
Filter Temp	(-30 to 50°C) Bead thermocouple at inlet of each canister

Figure 1.1. SASS showing aspirated Solar radiation shield, Canister Inlets, Tripod, Control Box, and Vacuum Pump Box.

The SASS flow system is shown in Figure 1.2 with the SuperSASS flow system shown in Figure 1.3. Individual flow lines lead from each sampling canister through the support pole to the pump box mounted on the ground. The flow from each of the first 3 or 4 canisters enters a volumetric flow controller.

Note: *In the standard SASS, canister #4 and #5 flows are set by a precision critical orifice.*

The check valve fitting on the side of the pump box for each canister can be used to close sample lines not in use. In the SuperSASS, a set of 8 solenoid valves are used to select which of the canisters are used during each test sequence. Vacuum lines for each orifice or flow controller, leads to an electronic mass flow monitor. The lines are then connected to a common manifold. A vacuum line from the manifold leads to the pump, which is housed in a fan-ventilated box.

The electronic mass flow sensor measures the sample flow rate and the processor uses the ambient temperature and barometric pressure reading to calculate and control actual volumetric flow at site conditions. These volumetric flow rates are shown instantaneously on the LCD display and logged on a five-minute average in the processor data logger.

Sample flow rates can be validated manually at the canister cyclone inlet before and after each sample event using an external NIST traceable device. Note: A low-pressure bubble meter, frictionless piston or venturi is recommended.

The physical configuration of the SASS is the similar to that of the Two-Week Sampler[6-8]. That sampler also uses a $PM_{2.5}$ inlet (although of a different type than SASS) mounted directly in the sample canister are housed underneath a solar radiation shield with downward pointing flow inlets. It has operated continuously at twelve sites since 1994, with collocated sampling precision of 5% for most species[9].

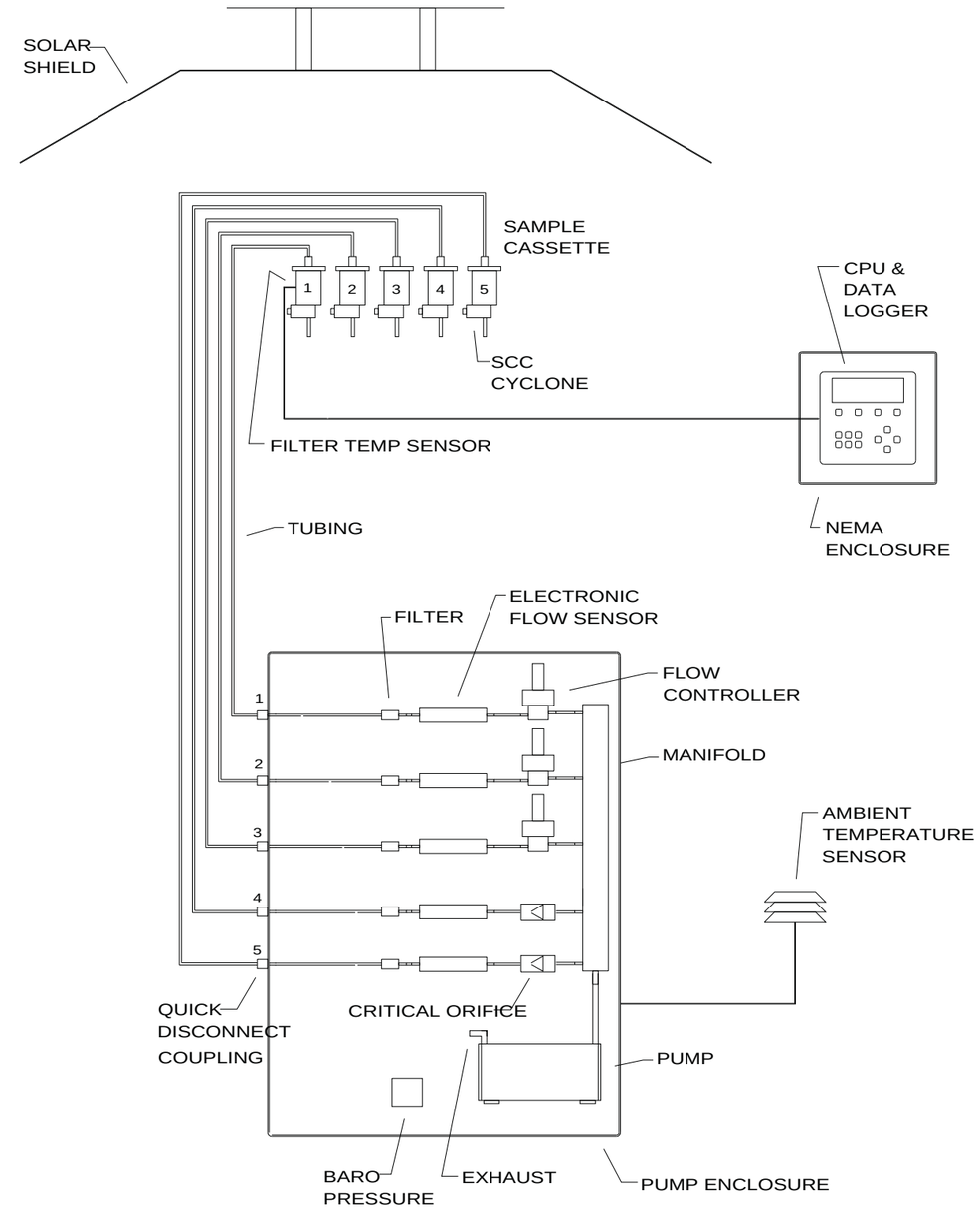

Figure 1.2. Flow Diagram for the SASS, showing solar radiation shield, sample canisters, ambient temperature sensor, control box, and pump box.

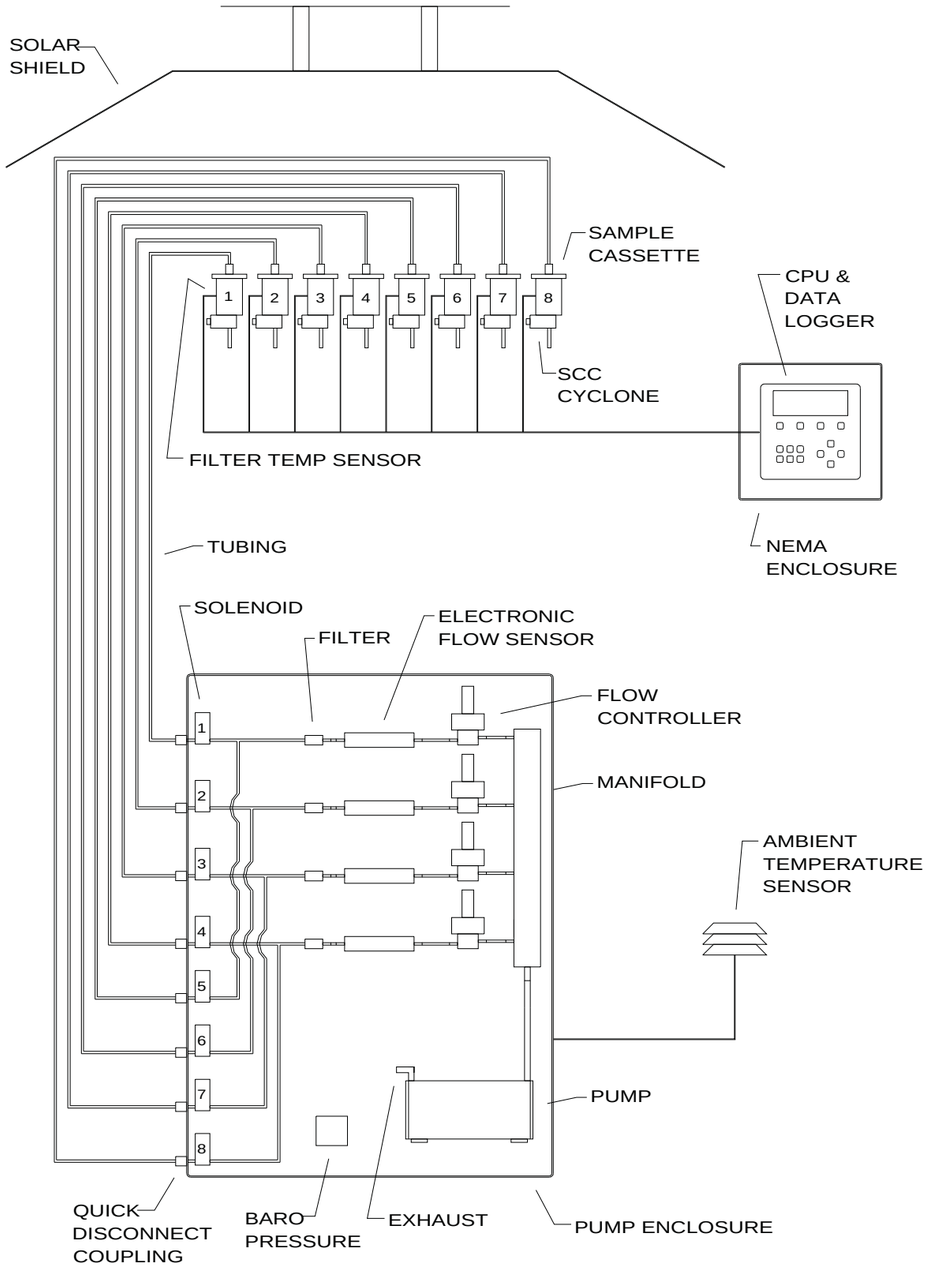

Figure 1.3. Flow Diagram for the SuperSASS, showing solar radiation shield, sample canisters, ambient temperature sensor, control box, and pump box.

1.3.1 The Integrated SASS Canister

The integrated sampler canister is shown in Figure 1.4. It contains the following components:

- Sharp cut cyclone at 6.7 L/M to remove particles larger than 2.5 µm aerodynamic diameter.
- Denuder to remove nitric acid or other interfering gases, or an empty denuder ring.
- 47mm Front filter for particle capture.
- 47mm Tandem or Backup filter, as needed.
- Cover to hold and protect the components

An empty denuder sleeve is used when no denuder is needed. If only one filter is used, it is placed in the front filter position, with the second filter holder being empty. Assembly details can be see in Figure 1.5.

Figure 1.4 Photograph of the disassembled SASS Canister, showing the SCC Inlet, the MgO denuder, the front and back filters and the protective canister.

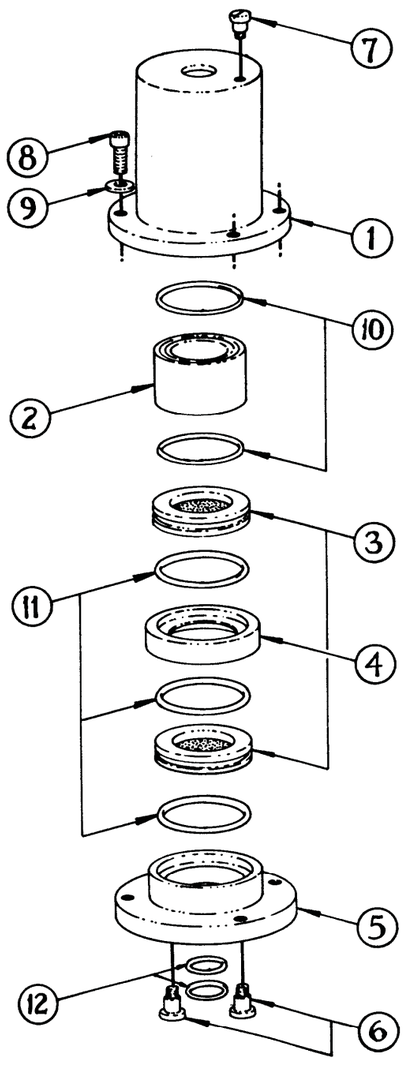

1- Cover #8379
2- Denuder Sleeve #8380
3- Filter Cassette, FRM #460128 (2 each)
4- Filter Spacer #8652
5- Outlet Plate #8378
6- Shoulder Screw #860024 (2 each)
7- Shoulder Screw #860029
8- Socket Head Cap Screw, 1/4"-20 X 5/8" lg. (3 each)
9- Flat Washer, 1/4" (3 each)
10- Viton O-Ring, #2-030 (2 each)
11- Viton O-Ring, #2-135 (3 each)
12- Viton O-Ring, #2-115 (2 each)

Figure 1.5 Speciation Sample Canister (PN 8370) Exploded View

1.3.2 The Sharp cut cyclone (SCC)I Inlet: Description and Performance

The SASS inlet selectively transmits airborne particles according to the EPA's $PM_{2.5}$ criteria[5]. After exiting the inlet tube (Figure 1.6), the aerosol moves cyclonically within the body of the cyclone where the larger particles are transported due to their inertia against the outer wall. It is the unique design of this computer-modeled cyclone[10], which produces the desired sampling efficiency[4]. The curvatures of the cyclone body causes particles to inertialy move towards the outside wall and migrate into the collection or grip cup to be disposed. Because the drift velocity is small compared to the velocity along the channel, deposition of particles is relatively gentle and at a tangential angle, which accounts for the observed lack of particle bounce, even without greased surfaces. The grit cup should be cleaned periodically.

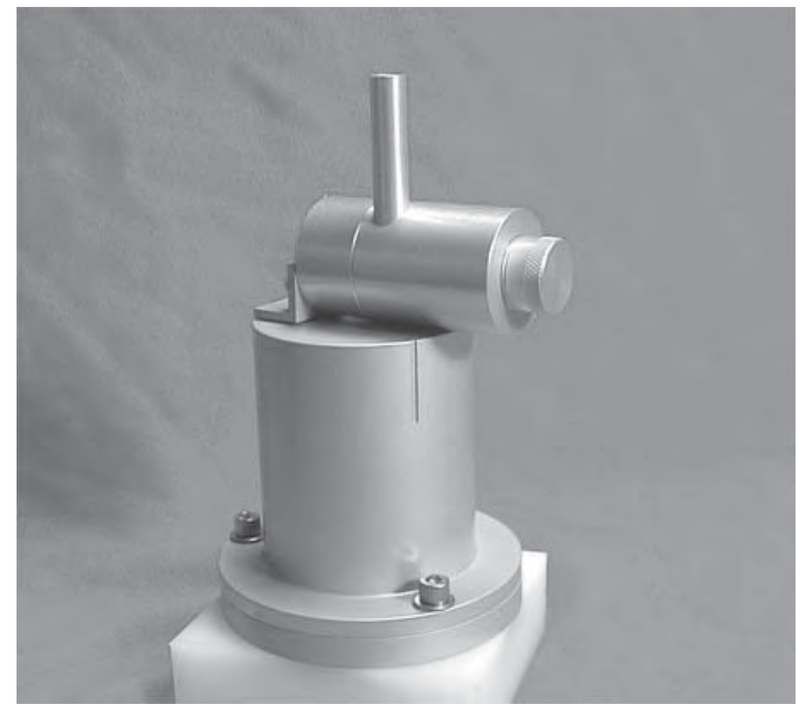

Figure 1.6. View of the Sharp cut cyclone Inlet that provides the $PM_{2.5}$ cut-point. Canister is shown Inverted in Canister Assembly Block

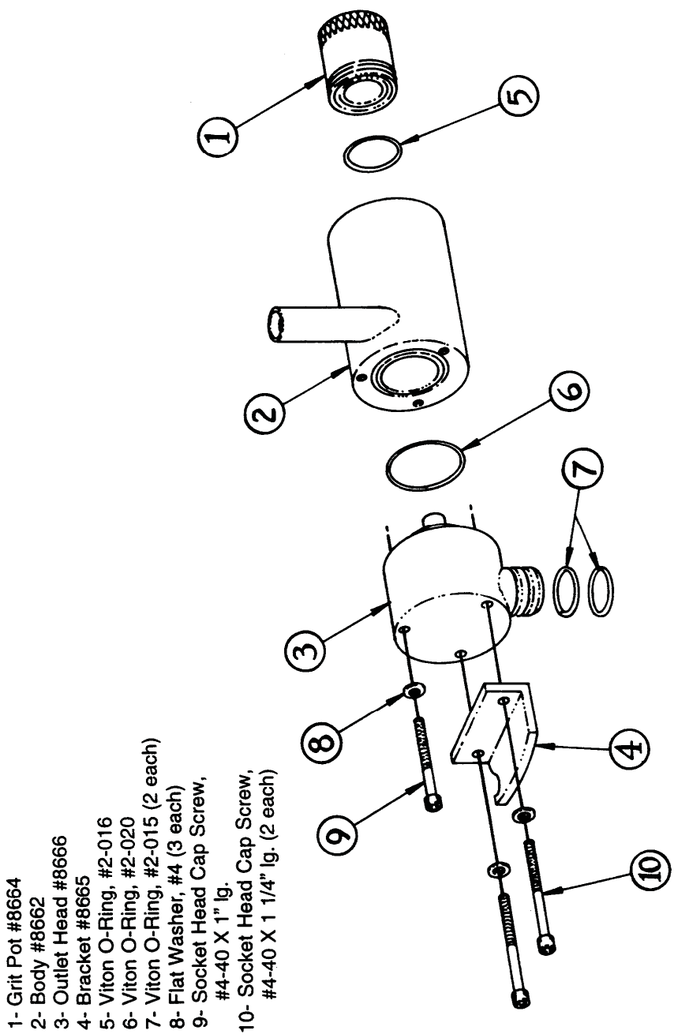

Figure 1.7 SCC Cyclone (PN 8670) Exploded View

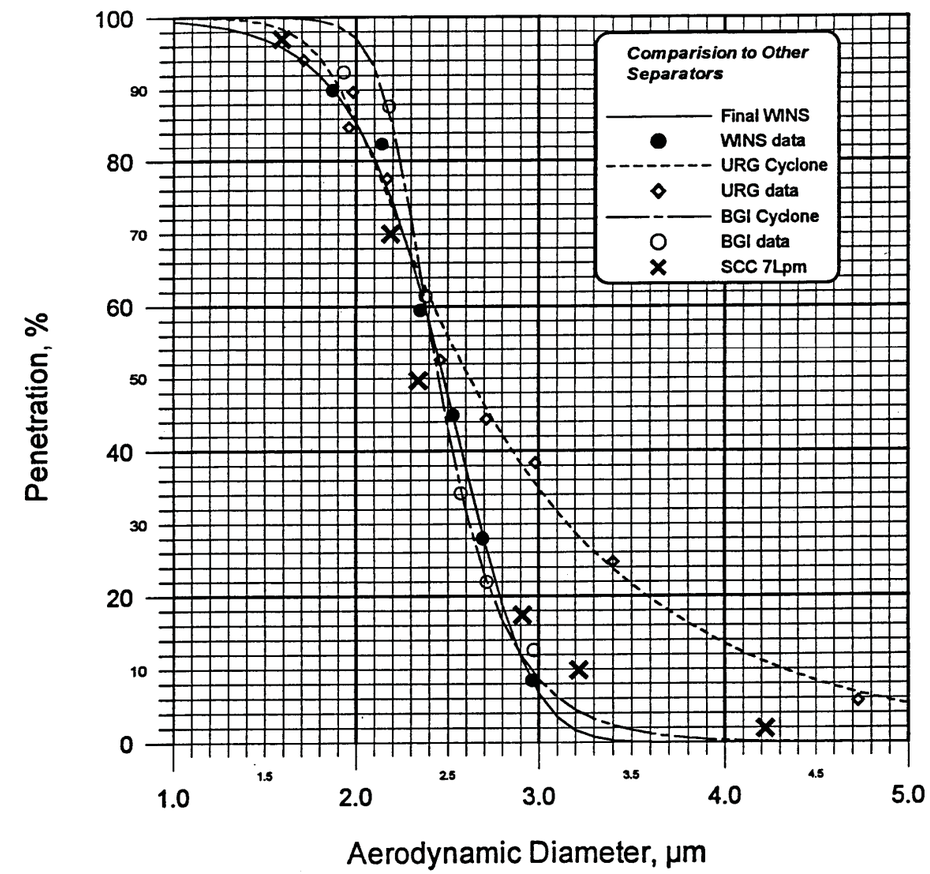

Figure 1.8. Penetration curve of the Sharp cut cyclone (Diameter 2.141mm) compared to the U.S. EPA WINS Impactor curve for $PM_{2.5}$.

1.3.3 The Multicell Denuder

Denuders consist of tubes or annular spaces that capture reactive gases while allowing the particles to penetrate. Gases have a large diffusion coefficient, and their random motion brings them into contact with the walls of the denuder. With appropriate coatings or selection of the denuder material, semi-volatile vapors are captured by the denuder walls. In contrast, the particles follow the airflow stream lines, and pass through the denuder without contacting the walls. The particles penetrate the denuder and are captured by a filter placed downstream of the denuder. The filter medium is selected so that it adsorbs vapor from any subsequent volatilization of the collected particles.

The SASS nitric acid denuder is an aluminum hexagonal cell material, coated with Magnesium oxide. There are approximately 350 hexagonal channels, each approximately 1.6-mm diameter. The denuder is 25 long. Calculations based on the Gormely-Kennedy relations show 100% collection for depositing vapors, with 99% to 100% penetration of particles greater than 0.08 µm in diameter.

Particle penetration through the denuder was measured in the laboratory using the aerodynamic particle sizer described above. These tests were conducted for both liquid and solid particles in the size range from 0.5 µm to 1.5 µm. First, tests with filtered air confirmed that there is no shedding of MgO particles from the denuder. Second, tests confirm 100% penetration of both liquid and solid particles in the size range tested.

The nitric acid collection efficiency of the SASS denuder was measured in the laboratory using a permeation tube source diluted with purified (ammonia free) laboratory air, and a catalyst equipped chemiluminescent nitrogen oxides analyzer detector. The measured nitric acid efficiency at the design flow rate of 6 L/min is 95%. Denuder performance results are summarized in Table 1.2.

Table 1.2. Results of SASS Denuder Performance Tests

Denuder	Parameter Tested	Test	Result
Multicell Aluminum. coated with MgO Length: 25 mm # of channels:~350	Liquid particle penetration	Penetration of oleic acid particles with diameters in the range from 0.5 µm to 1.5 µm	100% penetration for all particle sizes tested
"	Solid particle penetration	Penetration of solid particles with diameters in the range from 0.5 µm to 1.5 µm	100% penetration for all particle sizes tested
"	Collection efficiency for nitric acid	Measured the penetration of nitric acid through the denuder at concentrations of 50 ppb and 100 ppb	95-99% collection efficiency

1.3.4 Filter Media and Detection Limits

Several types of filter media are needed for assaying the different chemical constituents of ambient particles. The filter media must be suitable for the type of analysis to be done. For example, Teflon™ filters are used for gravimetric mass and trace metal determinations. Quartz filters are used for analysis of total organic carbon because, unlike other filter media, they contain very small amounts of carbon.

Detection limits for 24-hr samples collected on 47 mm filters at the standard SASS flow rate of 6 L/min are listed in Table 1.3. Values are based on analytical detection limits and filter blank variability, as reported by Chow and Watson[11].

Some analyses, such as ion chromatography involve extraction of the filter media. However other analyses such as x-ray fluorescence directly analyze the filter without extraction. These analyses require a uniform filter deposit. Similarly, the analysis of organic and elemental carbon is most often done using a small section, or punch from the filter. Again, it is necessary that the filter deposit be uniform.

The SASS sampler is designed to give a uniform filter deposit. The SASS filter support screens are manufactured to the same specifications as those for the Federal Reference Method $PM_{2.5}$ sampler. The FRM screens are specifically designed to avoid the grid patterns that can arise on Teflon™ filters when using coarse support screens.

Table 1.3.

Analytical Detection Limits for Ambient Aerosols Collected with the SASS

Species	Analytical Method	Method Detection Limit[1]	SASS Detection Limit[2] ($\mu g/m^3$)
Mass	Gravimetry	15 µg/filter	1.7
Chloride	Ion chromatography	0.05 µg/mL	0.06
Nitrate	"	0.05 µg/mL	0.06
Sulfate	"	0.05 µg/mL	0.06
Ammonium ion	Auto. Colorimetry	0.05 µg/mL	0.06
Soluble potassium	Atomic Adsorption	0.07 µg/mL	0.08
Organic carbon	Thermal Optical Anal.	0.82 $\mu g/cm^2$	1.07
Elemental carbon	"	0.19 $\mu g/cm^2$	0.25
Al	X-ray fluorescence	0.0025 $\mu g/cm^2$	0.0033
Si	"	0.0014 $\mu g/cm^2$	0.0018
P	"	0.0014 $\mu g/cm^2$	0.0018
Cl	"	0.0012 $\mu g/cm^2$	0.0016
K	"	0.0026 $\mu g/cm^2$	0.0034
Ca	"	0.0015 $\mu g/cm^2$	0.0020
Ti	"	0.0011 $\mu g/cm^2$	0.0014
V	"	0.00073 $\mu g/cm^2$	0.00096
Cr	"	0.00048 $\mu g/cm^2$	0.00063
Mn	"	0.0004 $\mu g/cm^2$	0.00053
Fe	"	0.00038 $\mu g/cm^2$	0.00050
Co	"	0.00022 $\mu g/cm^2$	0.00029
Ni	"	0.00022 $\mu g/cm^2$	0.00029
Cu	"	0.00027 $\mu g/cm^2$	0.00035
Zn	"	0.00027 $\mu g/cm^2$	0.00035
Ga	"	0.00048 $\mu g/cm^2$	0.00063
As	"	0.00039 $\mu g/cm^2$	0.00051
Se	"	0.00031 $\mu g/cm^2$	0.00041
Br	"	0.00025 $\mu g/cm^2$	0.00033
Rb	"	0.00024 $\mu g/cm^2$	0.00032
Sr	"	0.00028 $\mu g/cm^2$	0.00037
Y	"	0.00033 $\mu g/cm^2$	0.00043
Zr	"	0.00042 $\mu g/cm^2$	0.00055
Mo	"	0.00067 $\mu g/cm^2$	0.00088
Ag	"	0.003 $\mu g/cm^2$	0.0039
Cd	"	0.003 $\mu g/cm^2$	0.0039
In	"	0.0034 $\mu g/cm^2$	0.0045
Sn	"	0.0044 $\mu g/cm^2$	0.0058
Sb	"	0.0045 $\mu g/cm^2$	0.0059
Ba	"	0.013 $\mu g/cm^2$	0.017
Hg	"	0.00065 $\mu g/cm^2$	0.00085
Pb	"	0.00076 $\mu g/cm^2$	0.00100

1 from Chow and Watson (1998)

2 Assumes 24 hour collection at 6L/min with deposit diameter of 38 mm (11.4 cm^2) or extraction of entire filter in a volume of 10 mL

1.4 Sampler Configuration Options

The SASS is designed to be flexible. Any canister can be configured with just one filter, with two filters, with a denuder and one filter or with a denuder and two filters. The type of denuder and the filter media can be tailored to meet the needs and desires of the sampling program. In this way, it can accommodate new denuder filter methods as they become established.

For sampling nonvolatile particle constituents, denuders are not needed. Non-volatile components are readily collected by selection of a filter media appropriate to the analysis to be performed, and which does not adsorb gaseous species that could interfere with the measurement. For nonvolatile inorganic species, Teflon™ and quartz filters are usually used.

Semi-volatile constituents are collected using a denuded, adsorbing filter. This is because more volatile particle constituents can be lost during sampling due to evaporation from the filter substrate. Denuder – filter systems use a denuder that removes semi-volatile vapors followed by an adsorbing filter that retains both particle and vapor compounds.

Denuded filter methods have traditionally been used for measuring particle nitrates[12-19]. One method is to pass the air sample through a MgO coated denuder followed by a nylon filter[20]. The MgO coated denuder removes the gas phase nitric acid and other gaseous nitrogen species that can collect on the nylon filter. The particles pass through the denuder and are collected by the nylon filters. The nylon filter adsorbs nitric acid that is formed from the vaporization of the particle nitrate, and thus the nylon filter is able to retain the particle nitrate without vaporization losses. It is also possible to use tandem Teflon™ and nylon filters behind a nitric acid denuder to give inorganic ions and nitrate in the same cassette. However, if samples cannot be retrieved quickly after the end of the sampling period, a separate nylon filter downstream of the denuder may be preferred because of possible losses from the Teflon™ filter after the conclusion of sampling. (Note that the backup nylon filter will capture nitrate lost during sampling, but once sampling stops further volatilization will result in loss in nitrate to the sampler walls.)

For some constituents such as total organic carbon there is no accepted accurate sampling method. The organic compounds in the atmosphere include gaseous organic compounds that are readily adsorbed by the quartz fiber filters required for total carbon analysis[21, 22]. The particle phase also includes semi-volatile compounds that are lost by evaporation from the filter during sampling[23]. The magnitude of these two artifacts appears to be variable. Correction for positive artifacts has been done by sampling with two quartz filters in series, or by sampling with a quartz filter behind the Teflon™ filter. This backup filter is used to correct for the adsorption of gaseous organic compounds on the front quartz filters. However, some have argued that the volatilization of organic compounds during sampling is a larger source of error. Denuder-filter methods[23,] for organic carbon, analogous to that described above for nitrate, is a current area of research. The SASS can be used for organic sampling in any of the configurations described here.

The SASS is provided with one type of denuder, the MgO coated aluminum. The expected configuration for the SASS for most applications is shown in Figure 1.9. This has two Teflon™ filters, one for mass and metals analysis, and one for inorganic ion analysis. The third leg is a MgO-denuded nylon filter is provided for fine particle nitrate measurement and the fourth leg is double quartz for organic and elemental carbon analysis.

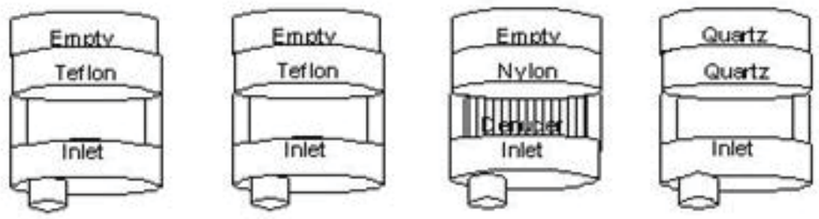

#1	#2	#3	#4
Mass (grav) Metals (XRF)	Inorganic Ions	Fine Particle Nitrates	Organic and elemental carbon

Figure 1.9. The expected configuration for the SASS canisters, including the use of an MgO denuder for removal of gaseous nitrates.

For EPA test configuration, the canisters are configured with canister 1 containing a Teflon filter, with canister 2 containing the MgO denuder and a nylon filter, and the third canister supplied with a quartz filter.

1.5 Sampling Head

The requirement to minimize the temperature differential between ambient temperature and filter (sample) temperature in the sample canister is a prime consideration in the design of the SASS. The solar radiation shield is one of three unique designs with the SASS. The second is the Sharp cut cyclone Inlet (Section 1) and third is the design incorporated features from the field tested "Two Week Sampler" of Aerosol Dynamics used over the past four years in California for the Children's Epidemology Study. Additionally, the SASS microprocessor firmware and SASS Comm AQ™ Software meets the requirements of the 40CFR Part50 Appendix L. The sampler operates with a clean exhaust diaphragm vacuum pump.

The SASS solar radiation shield has been designed to maintain the sample canisters and filter temperatures to the EPA FRM design requirement of < 5°C above the ambient temperature during and after a sampling event. This temperature control is designed to minimize the loss of semi-volatile materials from the aerosol sample. The SASS is designed to maintain the temperature differential between ambient and sample to within 3° C. The sampling head / solar radiation shield is physically separate from the sampling control and vacuum systems. The shield manufactured from aluminum for low mass. High reflectivity coatings are used on all surfaces. Isolation is included to minimize direct conductive paths upstream of the filters.

The Solar radiation shield is composed of an upper shield, lower shield and terrestrial shield. All three are uniquely designed from Met One's years of experience in measuring ambient temperatures using fan aspirated radiation shields. The large upper shields, flat top plate and second round plate provide primary solar radiation shielding. At the maximum solar input, between mid-morning and late afternoon, the lower shields are almost completely shaded by the primary shielding.

The requirement to minimize the temperature differential between ambient temperature and filter (sample) temperature in the canisters is a prime consideration in the design of the SASS. The solar radiation shield that is provided by the inlet head assembly is one of three unique designs with the SASS. This temperature control is designed to minimize the loss of semi-volatile materials from the aerosol sample.

The terrestrial radiation shield (the bottom flat part of the solar radiation shield assembly) cannot have air circulation across the outside surface as that could impact the ambient particulate sample going into the nozzle and sharp cut cyclone inlet. However, this flat shield prevents bounced radiated heat and light off the sampling deck or ground surface to heat the sampling canisters.

The sample canisters are housed inside the lower shields, mounted from above with a single point of thermal contact located after the filters. The design consists of two concentric shields separated by an air passage to allow the air to flow between the shields and this airflow "scrubs" the surfaces and effectively cools the cassette surfaces. The SASS has a thermistor temperature measurement at the first of the canister locations, as all canisters are used in a common test. For maximum flexibility with the SuperSASS, a thermistor temperature measurement is provided in each of the canister connections immediately after the hardware connection.

To insure the solar radiation shield is operating correctly, ambient air temperature and filter temperature are measured continuously and the logger records data. The air temperature is measured using a passive multi-plate radiation shield and thermistor temperature sensor that is mounted on the sampling pole.

Met One, EPA contractor, and state and local agencies to determine the effects of solar conducted numerous ambient field tests and terrestrial radiation and the temperature difference between ambient and filter temperatures. One site was chosen in a typical North West SLAMS monitoring site in Grants Pass, Oregon. Five days of 24-hour measurements were collected in May of 1998. The maximum solar radiation measured during these tests was 1250 W/m^2, measured with a NIST traceable Eppley™ meter. All data points are averaged over five minutes, built on a second sample. The temperate difference indicated over the five-day test was a maximum of –0.7°C. Arid desert sites like Phoenix indicate the SASS can maintain filter temperatures over a 24 hour sample event to within <2°C above ambient.

2.0 SITING AND INSTALLATION

2.1 Siting

40 CFR Part 58 Regulations and promulgated $PM_{2.5}$ National Ambient Air Quality Standard (NAAQS) were revised in 1997. A Chemical Speciation network of fifty (50) $PM_{2.5}$ sites was required to be operational by end of year 1998.

Note: Use of co-located instruments with carbon vanes, i.e., Hi-Vol, Anderson RAAS, etc can be a source of contamination and steps should be taken to isolate these instruments.

At the time of writing this operating manual two government documents are in draft form, which give specific details to guidance regarding siting, operation and analysis.

DRAFT "Particulate Matter $PM_{2.5}$ Speciation Guidance Document" May 4, 1998 Monitoring and Quality Assurance Group, Emissions, Monitoring, and Analysis Division, Office of Air Quality Planning and Standards, Research Triangle Park, NC 27711

DRAFT "Guideline on Speciated Particulate Monitoring" February 9, 1998 Prepared for Neil Frank & Jim Homolya, Office of Air Quality Planning & Standards (MD-44). U.S. Environmental Protection Agency, Research Triangle Park, NC 27711 Prepared By Judith C. Chow & John G.Watson, Desert Research Institute, P.O. Box 60220, Reno, NV 99506

The USA EPA Web site for more current information can be found at
http://www.epa.gov/ttn/amtic

2.2 Tripod

The SASS tripod comes as an assembled item. Upon removal from the shipping container, the operator simply removes the 3 ringed pins from the tripod leg bracket and folds down the three (3) legs of the tripod. The 3 pins are then re-inserted to hold the three legs in position.

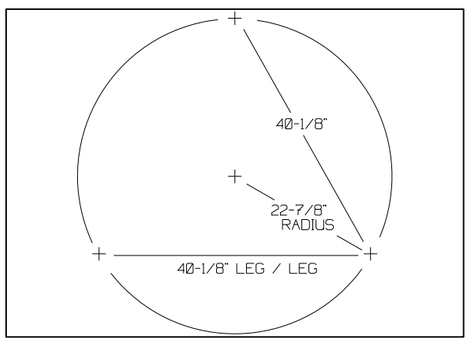

Figure 2.1 Mounting Hole Pattern

CAUTION: Note the tripod and sampling system operate at approximately 72 inches above ground or sampling deck level. It is very important to anchor the tripod with use of commercial hardware to the sampling deck to prevent damage in strong winds or weather.

(Note: Installation Instructions Are Additionally Supplied on Outside of Each Tripod Shipping Carton)

Holes are provided in the tripod feet and commercial hardware can be used to anchor the tripod to the sampling site. Typically, AMS and SLAMS operating sites are made of wood. Use of ¼: Lag Screw mounting is advised, to attach the tripod feet to the sampling platform. If the sampling site is on the ground, it is recommended to use spikes driven through the tripod mounting feet. If cement or other hard material makes up the sampling site surface, commercial hardware must be selected to properly secure the tripod.

2.3 Sampling Head Installation

Note: It is advisable for installation of sampling head to use a short three-step ladder and/or the help of a second person makes assembly easier. The bottom shield must be set in place before any of the socket head cap screws are set in place.

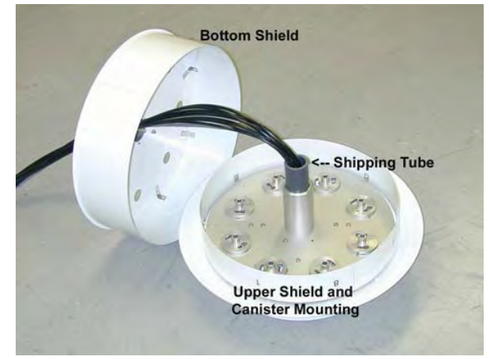

Figure 2.2 Sample Head (Upside Down)

Locate bottom shield. It is in the top portion of the sampling head that is found in the box containing the complete head assembly. (See Figure 2.2) It can easily be identified by the 8 holes in the flat portion. Lift it up off the rest of the sampling head, letting the hose and cable slide through the hub at the center of the shield. It is of mostly sheet metal construction with a hub and tethered pin. Pull the pin from the hub, letting it hang by its chain. Slide the shield down onto top of mast and allow it to rest on the leg weldment. There is a gray PVC shipping tube that will need to be removed from the center of the sampling head assembly. It is used only for aligning the two sections during shipment and is no longer required as part of the installation of the sample head.

Next, install the socket head screws as shown in figure 2.3. Locate the tool kit and plastic bag containing three (3) each 8-32 x 3/16" long socket head cap screws. (An extra screw is provided.)

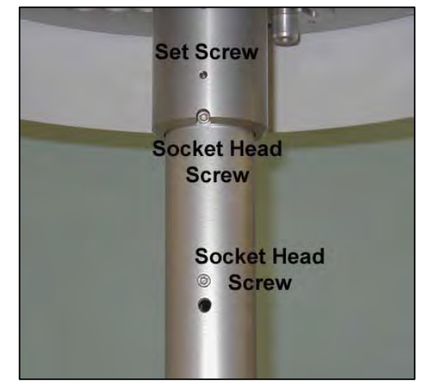

Figure 2.3 Screw Locations

Figure 2.4 Assembled Sample Head

Screws have been treated with thread-locking compound. Use the Allen wrench and install them into the two tapped holes in the top area of the mast. These screws provide upper and lower shield orientation.

Stretch out and unwind the cable with connector and tubing bundle coming from the hub of the upper sampling head. While supporting the sampling head, feed the bundle into the top of the mast and mount the hub onto the mast. Engage the notch in the hub with the topmost screw head to properly align unit. Tighten two (2) setscrews (factory installed in sampling head hub) to secure sampling head to mast.

Note: A bundle of sample flow lines and one (1) electrical cable should be coming out bottom of tripod tube.

Raise bottom shield to stop position, aligning he slot with screw head in mast and pin in place, while installing the next portion of the SASS Unit.

2.4 Control unit & Mounting

The SASS control unit is an all-weather & environmental NEMA rated cabinet. The control unit houses the microprocessor, LCD display, and keypad. The SASS control unit is designed for angle mounting on the tripod so that it can be easily read and operated.

Figure 2.6 Mounting Detail

Figure 2.5 Control Unit Mounting

There is no AC power in the control unit. The AC 110VAC 60 Hz enters the vacuum pump box and a DC power supply is used to operate the control unit. The control unit is provided with two metal mounting brackets and two sets of U-Bolt hardware clamps. It is the first item to be mounted to the mast. Use the supplied wrench or a 7/16" Nut Driver

A set of mounting brackets holds the control unit to the mast just above the top of the tripod legs. Use the two U-Bolts supplied in the hardware package and secures the control unit to the mast. Proper orientation of the control box is with the hinged side of the box facing the left (from the front) and all cable connections are facing the ground or platform in the middle of two legs of the tripod. Once the unit is positioned tighten the U-Bolt hardware clamps using the supplied wrench or by using a 7/16" nut driver.

See Figures 2.5 and 2.6 for mounting details.

2.5 Ambient Temperature Sensor Installation

The SASS includes a passive ambient temperature sensor using a thermistor protected by several round plates. The shield is naturally aspirated by the wind to provide an accurate temperature measurement. This is identical to EPA $PM_{2.5}$ FRM sampler. The ambient temperature sensor includes the Model 5980 temperature shield, Model 064-1 temperature Sensor, tripod mounting hardware and the connecting cable with connectors.

After the control unit is secured to the tripod, the next item is to mount the ambient temperature sensor and shield assembly. Attach the shield and temperature sensor assembly using one (1) U-Bolt and the two 7/16"nuts with washers. The temperature shield is mounted above the lower mounting bracket of the control unit. Place the ambient temperature sensor on the mast with the flat top plate facing up and the cable connector facing the ground. Lower the sensor until the mounting bracket hits the top of the bottom bracket of the control unit. Position the ambient temperature sensor so the shields face the back of tripod. When positioned secure the sensor by tightening the two 7/16" hardware nuts and Washers using the supplied wrench or a nut driver. Typically, it would be about 3 inch above the lower control unit U-bolt. The top of the shield should be about the same level as the top of the control unit box. This will allow the lower shield of the sampling head to be lowered without hitting the top of the temperature shield. See Figures 2.5 and 2.6 for details.

Attach the cable and connector to the ambient temperature sensor from the pump control box. It is impossible to misconnect the cable since the connections are keyed.

2.6 Canister Installation

It will be necessary to install the 2.5-micron sharp cut cyclone (SCC) to the bottom of each filter canisters. A very light coating of silicone grease can be applied to the two O-rings on the cyclone. Use just enough to "wet" the O-rings. The short fitting with the two O-rings is inserted into the hole on the bottom of each canister. It is then rotated until the notched corner of the SCC mount is under the lock screw of the canister.

Figure 2.7 Inserting Canisters

Note: Do not loosen or remove the fixed shoulder bolts that are mounted in the canister. These are locked in place are necessary for proper installations of both the canister and the SCC inlet assembly.

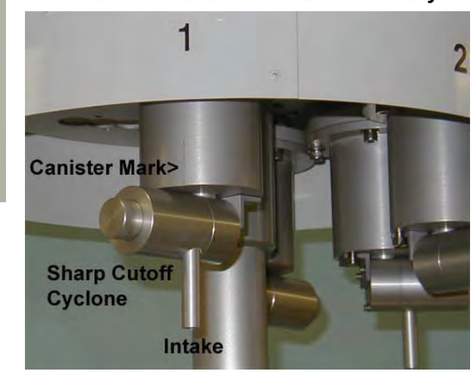

Figure 2.8 Canister Mark

Details on the canisters can be found in Section 1.0 of this manual. The Sampling Head Assembly has mountings for up to eight filter sampling canisters. Around the outside of

the upper shield are labels indicating the location of the sampling canisters. (Note: In some instances during operation, only three or six of the canisters will be installed) Each canister has a pair of mounting shoulder bolt posts and a vacuum connection with O-rings. The posts are slipped into the inlet assembly and the O-ring seal provides an airtight seal to the airflow system. The canister's alignment posts are inserted into the larger holes in the mounting fixture of the Inlet head. Apply a very light coating of silicone grease to the O-rings on the top of the canister. Use only enough to "wet" the O-rings; any additional or excess grease may contaminate other parts in the air path. Push up the canister, and then rotate clockwise (looking up) to the stop and it will lock into place.

Each canister has a mark that should be pointing out and away from the center of the support tripod. This can be seen in Figure 2.8. Once all the canisters are installed in the sampling head, the lower shield can then be up raised up and locked into place. When raising the lower shield, be sure that the slot in the shield must be aligned with the socket head screw. Once in the correct position, the locking pin on the chain can be inserted in place to hold the lower shield assembly in the operating position.

Note: When removing the canisters, keep them in their normal operating position and remove the Sharp cut cyclone. Do not invert the canister when removing the SCC, as any loose material in the cyclone might fall into the canister and contaminate the collection filter. Once removed, cap both ends of the canister with the supplied yellow stoppers. Removing the grit cup, and dumping it out, and then a quick blow of clean air through the cyclone to remove any collected dust can then clean the cyclone.

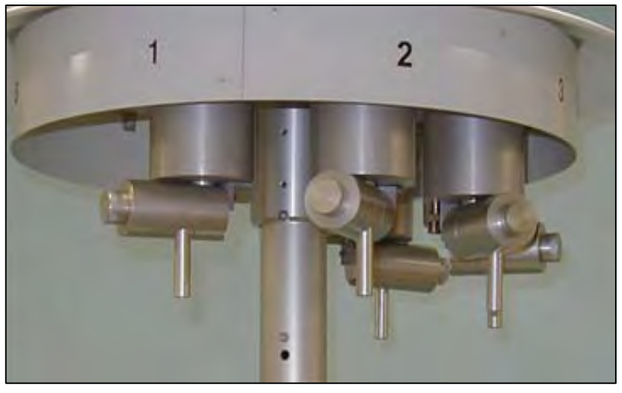

Figure 2.9 Installed Canisters

Note: As part of the EPA project to monitor PM2.5 particulate, canisters, denuders, and canister spare parts are sent to the EPA contractor in charge of filter analysis. They will be cycled around on a regular basis to collect filter data. If the SASS owner chooses, some canisters can be retained for their own use and analysis of collected samples. Typically, in the EPA project, only three canisters are used in each test, at one time in the SASS. All materials for collection of samples, chain of custody, and transport cooler will be provided by the EPA contractor.

2.7 Pump Box Mounting

The dual diaphragm AC vacuum pump is contained in its own environmental shelter isolated from the SASS to prevent vibration, noise, heat and any potential of exhaust contamination. The vacuum pump is a dual head Thomas Co.™ diaphragm vacuum pump mounted with four bolts through the bottom of the cabinet.

The vacuum pump box contains a filter screen under the pump and an aspiration fan on the side. Heat is exhausted from the box by pulling ambient air in the base and through the fan and exhausting on the right. The pump box is mounted on an aluminum framework stand with four ¼" anchoring holes provided in the base. The pump box will be located in a position that is close to the base of the tripod. The pump box is made to sit on the floor or deck of the sampling platform and the pre-drilled holes for securing to the platform. The base can be mounted using ¼" bolts or lag screws. The holes are located on a hole pattern that is set on 10" x 16" dimensions.

AC power supplied to a DC converter powers the entire SASS system. The vacuum pump box contains three cables. One is the 110VAC 60HZ power cable, which is connected to the AC grounded service. The second is a signal cable with a screw type connector that attaches to the ambient temperature sensor. The third cable from the bottom of the pump box connects to the center connector on the bottom of the control unit. Be sure that this cable connection is pushed securely into the mating connector on the control unit. Once inserted rotate the outer ring on the front of the connector to lock it in place on the control unit. A multi-pin connector on the side of the pump box connects to a multi-conductor cable that runs down from the sampling head assembly.

With the inlet head in place, it is then necessary to make the sample line connections. There will be either Five (5) or Eight (8) labeled sample lines, visible below the mast-mounting tube. Pull each individual sample tube out and attach #1 tube to #1 Quick-Disconnect valve connector on the side of the Pump Box. If only three canisters are used with SASS, lines 4 and 5 can be left disconnected and capped. Now, attach the filter canister temperature sensor cable if not already done.

Once all the cables have been connected, some tie wraps can be used to secure the various cables to the support tripod. Be sure that the tie wraps used are the black colored type. The natural or nylon type will degrade in the sunshine, and break after only a short time in the sun.

Figure 2.10 Tubing Installation (SuperSASS)

2.8 System Grounding

To provide electrical hazard protection, a heavy green/yellow ground cable, is attached to the bottom of the pump box. This ground cable provides an electrical hazard ground, and static discharge path. It also provides some protection to the equipment from induced electrical currents that may occur during nearby lightning strikes.

> ***NOTE: Because of the potential for injury and possible loss of life, the operator should not work around the SASS unit during lightning storms or whenever there is the possibility of nearby lightning strikes. In general, the location of the SASS and its association with other similar equipment, accentuates the potential hazard to the user.***

For maximum effectiveness the ground cable should be connected to a nearby earthed ground rod. If a ground rod is not available, a cold water pipe can be used as an alternative. If a water pipe must be used, be sure that a suitable type of compression grounding clamp is attached to the water pipe.

> ***NOTE: If a water pipe is used as a ground, be sure that it is a cold water pipe, and not a gas pipe, or hot water pipe. They do not provide a suitable ground, or have the potential for explosion.***

In addition, it is recommend that one leg of the mounting tripod also be grounded to the same earth ground used to ground the pump box. For maximum effectiveness, a copper cable of AWG # 6 or larger should be used to ground the tripod.

3.0 SETUP AND OPERATING PROCEDURES

3.1 Operational Checkout of System

The SASS system is powered by plugging the male AC power cord into a 115 VAC supply. There is no on/off switch. The pump fan in the pump box should be detected operating and the LCD display of the Control unit should illuminate. The screen of the control unit will start up in the Main Screen as displayed below in Figure 3.1. From this point pressing the push buttons located below the four main screen menu selections can access all other necessary screens.

Note: For a detailed list of all menu selections, see Section 4.0 of this manual.

```
        SASS Speciation Sampler
                V 4.02

       Met One Instruments, Inc
            www.metone.com
                                  Transfer
Event     Setup    Calibrate      Data
```

Figure 3.1 Example of Main Screen

Note: Due to ambient temperature the LCD display may be weak or saturated. Adjust contrast using the ✱ key on the Control Box keypad. Continued pressure on the key will lighten or darken the LCD display.

As part of the preliminary setup and checkout of the SASS or SuperSASS, the following process can be used to verify the operation of the unit. Differences between the two units will be indicated. It will also cover the programming of the unit to begin the first test sequence and any additional sequences following the first test. To insure that the system has been correctly assembled, there are no leaks, and that there has been no damage to the SASS use the following procedure.

3.1.1 Temperature, Pressure and Flow Test

From the main screen menu, select the “Calibrate” function. This will take you to the next menu selection identified as the Calibrate Menu. From this menu select the “System Test” item by pressing the F1 key as indicated in the menu. Once the F1 key has been selected the following screen shown in Figure 3.2, with the following options will appear.

```
System Test            MM/DD/YY HH:MM:SS
Ambient P   724 mmHg   Ambient T  24.4 C
   Flow 1    .0 Lpm    Filter 1   24.5 C
   Flow 2    .0 Lpm
   Flow 3    .0 Lpm
   Flow 4    .0 Lpm
   Flow 5    .0 Lpm   Pump:   ON
                      Pump     Exit
```

Figure 3.2a System Test Screen (SASS)

```
System Test            MM/DD/YY HH:MM:SS
Ambient P   724 mmHg   Ambient T  24.4 C
   Flow 1    .0 Lpm    Filter 1   24.5 C
   Flow 2    .0 Lpm    Filter 2   24.3 C
   Flow 3    .0 Lpm    Filter 3   24.3 C
   Flow 4    .0 Lpm    Filter 4  -xx.x C
                      Pump:   ON
Cans                 Pump     Exit
```

Figure 3.2b System Test Screen (SuperSASS)

At this point the current ambient temperature, the current temperature of the filters in the sample head, and the current absolute barometric pressure in mm/Hg will be displayed. The SASS provides a single filter temperature while the SuperSASS includes filter temperatures for each group of four canisters. In addition, the SASS provides flow values for all five canisters with the SuperSASS having flow for a maximum of four canisters. The values for flow on all channels should be at 0.0 LPM. If the values displayed for temperature or barometric pressure are obviously incorrect, check to verify that all connections have been made and the connectors from the pump box are installed. If any problems are found, consult Section 6.0 of this manual for assistance in trouble shooting problems.

If all looks correct, then the button under the menu selection “pump” can be pressed. This will bring up the following caution screen. This is displayed to prevent stopping an event in progress to activate the pump.

```
...............Caution...............

 Press 'Continue' to STOP the sample
 event and control the pump.



 Cancel                       Continue
```

Figure 3.3 Test Caution Screen

Pressing the “Continue” will activate the pump and you should immediately hear the pump start inside the pump enclosure. The pump should not have been running prior to pressing the “pump” button on the keyboard of the control unit, unless a test event was already in progress. The only exception to this would be if the temperature inside the pump box were below 35 degrees F. Under these conditions, the pump is automatically turned on so that there is no possibility of the pump not starting correctly in cold weather. If the pump was running, pressing the “pump” button will cause the bypass valve in the pump box to de-activate and flow values should now appear on the screen of the control unit. The values for all canisters should be between 6.6 and 6.8 LPM of flow.

If the flow value is far outside this range, then check use the trouble shooting information contained in Section 6.0 of this manual.

3.1.2 Leak Check of System

Use the following procedure described in the revised section 6.2 for System Leak Check .

3.1.3 Calibration of System

When supplied from the factory, the system has been setup and calibrated using NIST traceable standards for measurement of flow, pressure and temperature. It should be ready for operation as supplied, and the operator using this procedure as described in Section 3.1 has verified operation. If a complete calibration is required, see Section 6.0 of this manual for procedures.

3.2 Programming of System

As delivered, either type of SASS will need to be set with the current date and time, as well as some default values for typical operation. This can be done, by selecting the “Setup” button from the Main Screen as shown in Figure 3.1. One selected, the Setup Menu Screen as shown below in Figure 3.4 will appear.

```
Setup Menu
F1: Event Manager
F2: Event Defaults
F3: Clock
F4: Unit ID
F5: Clear Event History
F6: Flow Sensors
                                Exit
```

Figure 3.4 Setup Menu

3.2.1 Setting Date and Time

Pressing the keyboard key “**F3**” will take you to the Clock Setup Screen (See Section 4.3.3) and time at the installed location of the SASS. From the screen menu use the left and right arrow keys to move to the values of MM/DD/YY or HH:mm:ss that need to be changed. Then use the up and down arrow keys at each digit, to change the current values to the current date and time. Once completed, press the “Set” key and the newly entered values will be entered as the new default values. At the point the “Set” key is entered, the new time will be entered. It’s best to set the time to a future time or at the top of the minute, and then enter “Set” when that time occurs.

3.2.2 Setting Default Elapsed Time for Tests

Pressing the keyboard key “**F2**” will take you to the default setup screen, this is used to set up the default value that is used for the total elapsed time for each run of the SASS during the operation and collection of sample material in the installed canisters. This also allows for the selection of a default set of canisters. See section 3.2.3 for a listing of the defined sets of canisters. Factory default set is {1,2, & 3}.

```
Sample Event Defaults
          Event Length: HH:mm
          Canister Set: {1,2,3}
```

```
Save                          Exit
```

Figure 3.5 Default Values Menu

From the Sample Event Defaults Screen (See Section 4.3.2) use the left and right arrow keys to move to the values of HH or mm that need to be changed. Then use the up and down arrow keys to change the current values to the typical value used for all sample collection. Once completed, press the “Save” key and the newly entered values will be entered as the new default values.

3.2.3 Event Manager

SASS includes an Event Manager for the most flexible operation. It is used to program the start time and duration of all test sequences. Each test event or sequence must be pre-programmed into the Event Manager. The Event Manager will maintain a pre-event list, up to four (4) pre-events are allowed. When working with SASS, the events are entered, but the canisters cannot be sequenced, all of them 1 to 5 will be operating at the same time. Unused vacuum lines can be disconnected at the pump box. The SuperSASS allows for sequential programming of the groups of canisters that will be used for each sample event. Twenty-four (24) post events are archived in a circular manner where the oldest is overwritten by the newest addition.

```
Event Manager          MM/DD/YY HH:mm:ss
Start Date/Time    Length  Canisters
MM/DD/YY HH:mm:ss  HH:mm   {1,2,3}
MM/DD/YY HH:mm:ss  HH:mm   {5,6,7}



   Add      Modify    Delete     Exit
```

Figure 3.6 Event Manager

Only active pre-events are listed. They are ordered (top to bottom) by the earliest date and time. Up to four (4) pre-events can be listed. Use the up and down arrows to select an event for modification or deletion. If there are less than 4 pre-programmed events then the Add key will bring up the Add Event screen. Typically as delivered from the factory, there are no pre-programmed events programmed into the Event Manager. The Add key is also used to begin the first event sequence. See Figure 3.6


```
Add Event            MM/DD/YY  HH:mm:ss
                     MM/DD/YY  HH:mm
        Event Start: MM/DD/YY  HH:mm
       Event Length:           HH:mm
       Canister Set: {1,2,3}


   Add               Default    Cancel
```

Figure 3.7 Add Event Screen

Edit the Event Start date and time, Event Length time, and the Canister Set. The canister set is a pick list of defined sets. Use the up down keys to select the specific canister set or use the Default key to select the default set and event length. Even though the canisters cannot be sequenced in the SASS unit, it is necessary to indicate to the control box which canisters are installed and used as part of the sample event. Doing this insures that the correct data is recorded for each flow sensor and canister set. All of the control box screens are dynamically updated; they only show the active canisters as part of the reported data. Typically as part of the EPA test plan, SASS canister set {1,2, & 3} will be used. This is also the default set.

- Defined set for SASS consists of {1}, {1,2}, {1,2,3}, {1,2,3,4} and {1,2,3,4,5}

- Defined sets for SUPER SASS are {1}, {2}, {3}, {4}, {1,2}, {3,4}, {5,6}, {7,8}, {1,2,3}, {5,6,7}, {1,2,3,4}, and {5,6,7,8}.

Press the Add button to add this event to the pre-event list. A successful add will return the user to the Event Manager screen. Edit keys are available to modify or delete the events.

Press the Modify button to view the Modify Event screen.
Press the Delete button to view the Delete Event screen.

3.2.4 Setting ID Value of SASS System

Pressing the keyboard key “**F4**” will take you to the ID Setup Screen (See Section 4.3.4). This screen allows the entry of an ID value for this particular site. Normally site number that was entered at the factory is the serial number of the control unit. If a different ID value is to be used then use the up and down arrow keys at each digit, to change the current values to the new ID value. Once completed, press the “Save” key and the newly entered values will be entered as the new ID.

3.2.5 Clear all Event History

Pressing the keyboard key “**F5**” will clear all event history. This would typically be used to clear all events, or to start up the SASS at a new location. It will bring up a warning screen before allowing the clearing of all event history. (See Section 4.3.5)

Note: This completes the initial setup of required preset values in the unit. The last menu entry for flow sensors is factory set and should not be changed unless there has been a replacement of the flow sensor from a 20 LPM to a 10 LPM Sensor.

3.3 Preparation for Test Sequence

Once the system setup values and the sequence have been entered, the first test sample sequence can begin. Each test sequence will require a new set of canisters properly configured with filters and identified. If the SASS is used as part of the EPA Trends Network Speciation Project, then the pre-loaded canisters will have been loaded with filters and supplied in a protective cooler. Each canister supplied as part of the data collection project, from the EPA will have a specific serial number identified by a bar code; along with a colored dot indicating which position, the canisters are to be installed. (See Table 3.1) Specific information on the setup and installation location of the canisters will be supplied from the third party contractor that is doing the actual filter evaluation and testing. The colored dots are typically supplied from the EPA or the third party contractor. The canisters are supplied less the Sharp Cut Cyclones and they will need to be installed on the canisters before they are installed in the sample head. Typically, only three canisters are used as part of the EPA Trends Network.

The next step is to install the canisters in the appropriate locations, install the lower shield, and setup of the control unit for the correct operating sequence.

Canister Number	Color Code
Canister #1	Green
Canister #2	Red
Canister #3	Orange
Canister #4	Blue

Table 3.1 Canister Color Codes

Note: At the time of printing of this manual, specific color configuration has yet to be determined by the EPA for any changes in color codes for canisters used in sequential sampling systems.

3.3.1 Starting Sample Event

If the sequence has been programmed into the Event Manger in section 3.2.3, the system is ready to start the next test sequence when the start time has been reached. From the main menu on the menu screen, select the Event key selection. This will take you to the menu screen identified as Event Menu as shown below.

```
Event Menu
F1: Current Event Status
F2: Previous Event Summary
F3:
F4: Event Manager
F5:
F6: Historical Event Summary
                                Exit
```

Figure 3.8 Operate Menu

From this screen, select the **F1** Menu Item. This will advance to the Status Menu as shown below.

```
Status: Finished        MM/DD/YY HH:mm:ss
 00       Canister Set: (1,2,3)
          Event Start: MM/DD/YY HH:mm:ss
```



```
          Event  Stop: MM/DD/YY HH:mm:ss
          Event Length:         HH:mm:ss


                <<        >>       Exit
```

Figure 3.9 Status Menu (Finished)

The next test will begin at the date and time programmed into the event sequence menu. Once the test has been completed, the status menu will display Finished as the status on the screen. If a sample event is in progress then the Status will be indicated as Sampling as shown in Figure 3.10.

```
Status: Sampling        MM/DD/YY HH:mm:ss
 00       Canister Set: (1,2,3)
          Event Start: MM/DD/YY HH:mm:ss
          Event  Stop: MM/DD/YY HH:mm:ss
              Elapsed:          HH:mm:ss
            Remaining:          HH:mm:ss

                <<        >>       Exit
```

Figure 3.10 Status Menu (Sampling)

3.3.2 Collecting Data After Sample Event

Following the sampling event, the data required for documentation of the results can be done manually or via the RS-232 port on the Control Box. Both methods can be used to provide immediate and archival storage of information. See typical form in Appendix B of this manual.

Using the RS-232 Connection and PC

Located under the control box, the most left hand circular connection is for the RS-232 cable supplied with the SASS Unit (Part Nr 3159). It is a four pin circular connector with a 9-pin RS-232 female (DE-9F) type connection at the other end. Connect the circular connection to the control box, and the 9-pin connector to the laptop PC or to an RS-232 extension cable to a PC Computer. In most applications, RS-232 connections are typically, limited to 50 ft. unless special low loss cables are used. Longer lengths of cable made from some types of wire can cause errors in the data collection process.

Use the SASSComm AQ Software version 4.0.1 (or higher), supplied with the system, to collect the data from either type of SASS. Consult the SASSComm AQ Manual for specific information on data collection via the RS-232 port, or via telephone dial-up modem.

Using the Transfer Module

A small transfer module UX-961 can be used to collect data from the SASS. This is a useful accessory item that is described in Section 6 of this manual. It simply plugs into the SASS Control Box. Using the special RS-232 Cable part nr 3169 supplied with the transfer module. Connect the 9-pin end to the transfer module and the circular 4-pin connector to the RS-232 connection on the control box. **NOTE: The standard RS-232 cable nr 3159 will not work.**

```
Super SASS Speciation Sampler
            V 4.02

Met One Instruments, Inc
```

```
            www.metone.com
                                  Transfer
Event       Setup     Calibrate     Data
```

Figure 3.11 Main Screen

Once connected, select the Transfer Data button from the main control box screen as seen in figure 3.11. This will activate the data transfer of information from the control box to the transfer module. The screen will appear with download information as the data is copied from the control unit to the transfer module. Note: Only one SASS sampler data set can be stored in the transfer module at any one time. Once the data has been removed, the same transfer module can be used to collect data from another SASS System.

Take the transfer module to the PC computer using the SASS Com Software, and follow the procedure for extraction of data from the transfer module. Collected data will be stored in the PC computer where reports can be generated on the results of this sample run. This method will also collect all of the 5-minute data from the data logger of the SASS.

Manual Collection of Data

To fill out the transfer of custody / field data form provided from the vendor that is doing the analysis of the collected canisters; it will be necessary to record the data from the various screens. Select from the main menu the Event screen as shown in Figure 3.8 in this section of the manual. Next, Select the key "**F2**" for Previous Event Summary. This will display the data from the previous event that was most recently completed. Note: When all programmed events are completed, the current event status and the previous event summary will be the same.

Using the << and >> arrow keys under the menu, the remaining status menus can be viewed, to find the additional information required for filling out the forms. Using the right arrow key >>, the first screen is "Current" it displays current values, press the key again and it comes to the screen "5 Min Values" it shows the last 5 minute values that were collected. Now press the >> key once more and it goes to the first of the screens containing the information for the custody/field data form. This is the "Volume Summary" Screen.

```
Volume Summary          MM/DD/YY HH:MM:SS
Ambient P   xxx mmHg    Ambient T –xx.x C
Volume 1  x.xxx m3      Filter 1  –xx.x C
Volume 2  x.xxx m3
Volume 3  x.xxx m3
Volume 4  x.xxx m3
Volume 5  x.xxx m3
             <<         >>       Exit
```

Figure 3.12a Volume Summary Screen (SASS)

In the SASS unit, up to 5 of the recorded volumes will be displayed. The total number will be based on the number of canisters selected for the sample event.

```
Volume Summary          MM/DD/YY HH:MM:SS
Ambient P   xxx mmHg    Ambient T –xx.x C
Volume 5  x.xxx m3      Filter 5  –xx.x C
Volume 6  x.xxx m3      Filter 6  –xx.x C
Volume 7  x.xxx m3      Filter 7  –xx.x C
```



```
Volume 8  x.xxx m3      Filter 8  –xx.x C

             <<         >>       Exit
```

Figure 3.12b Volume Summary Screen (Super Sass)

From this screen the volume, data as well as the average values over the previous event can be examined and transferred to the field data form. In the SASS unit, there can be up to 5 flow channels displayed. Press the >> Key again and this will bring up the "CV Summary" Screen as shown below.

```
CV Summary              MM/DD/YY HH:MM:SS
          CV       Mean       Std Dev
 Flow 1       %        Lpm        Lpm
 Flow 2       %        Lpm        Lpm
 Flow 3       %        Lpm        Lpm
 Flow 4       %        Lpm        Lpm

             <<         >>       Exit
```

Figure 3.13 CV Summary Screen

From this screen the CV values, Mean Values as well as the Standard Deviation of the flow measurements taken during the previous event can be examined and transferred to the field data form. Press the >> key again and this will bring up the "Min/Max" Summary Screen as shown below.

```
Min/Max Summary         MM/DD/YY HH:MM:SS
 Ambient T Max       C
           Min       C
Filter 1 T Max       C
           Min       C
 Ambient P Max     mmHg
           Min     mmHg
             <<         >>       Exit
```

Figure 3.14 Min/Max Summary Screen

On SuperSASS, use the Up and Down arrow keys to scroll through the filter canister numbers to select the desired filter temperature. The SASS unit provides only a single filter temperature from canister #1. From this screen the various min/max values, for temperature and pressure that were recorded during the previous event can be examined and transferred to the field data form.

Press the >> key again and this will bring up the "Filter DT Summary" Screen as shown on the next page.

```
Filter dT Summary       MM/DD/YY HH:MM:SS
Max dT
 5 –xx.x C    MM/DD/YY HH:mm:ss
 6 –xx.x C    MM/DD/YY HH:mm:ss
 7 –xx.x C    MM/DD/YY HH:mm:ss
```

```
                <<        >>       Exit
```

Figure 3.15 Filter Temperature Summary Screen (Super SASS)

This screen indicates the maximum temperature recorded between the ambient temperature and the filter temperature. The SASS screen, provides only a single MAX dT value for filter canister #1 and the ambient temperature. It also includes the date and time of the maximum value. This value will continue to record even after the event has been completed, so that the value includes any differences that occur before the sample canister is removed.

Press the >> key again and this will bring up the “Warnings” Summary Screen as shown below.

```
Warnings                MM/DD/YY HH:MM:SS
Elapsed Time: YES  HH:mm:ss < 23:00:00
Filter dT
 5   YES    –xx.x C    MM/DD/YY HH:mm:ss
 6   YES    –xx.x C    MM/DD/YY HH:mm:ss
 7   YES    –xx.x C    MM/DD/YY HH:mm:ss

               <<        >>       Exit
```

Figure 3.16 Warnings Screen (Super SASS)

This screen indicates if there were any alarms or warnings, which occurred during the previous test. A “Yes” value indicates that an alarm occurred, the date and time of the event is stored on the screen. These alarm results can be examined and transferred to the field data form. As before, the SASS version of this screen will show only a single filter temperature warning.

Press the >> key again and this will bring up the “Flow Warnings” Summary Screen as shown below.

```
Flow Warnings          MM/DD/YY HH:mm:ss
                 Lpm
   Flow 1: Yes   xx.x MM/DD/YY HH:mm:ss
   Flow 2:  No
   Flow 3:  No
   Flow 4:  No
   Flow 5:  No
              <<        >>       Exit
```

Figure 3.17 Flow Warnings Summary Screen (SASS)

This screen indicates if there were any alarms or warnings, which occurred during the previous test, related to flow measurement. A “Yes” value indicates that an alarm occurred, the date and time of the event is stored on the screen. The SASS screen can display up to 5 separate flow warnings, while the SuperSASS would have a maximum of 4 flow warning channels. These alarm results can be examined and then are transferred to the field data form. This completes the collection of data results required by the field data form.

Pressing the >> Key again brings up the “Power Interruptions” screen. This screen provides information on power interruptions that may have occurred during the sampling event.


```
Power Interruptions    MM/DD/YY HH:MM:SS

1 MM/DD/YY HH:MM:SS  6 MM/DD/YY HH:MM:SS
2 MM/DD/YY HH:MM:SS  7 MM/DD/YY HH:MM:SS
3 MM/DD/YY HH:MM:SS  8 MM/DD/YY HH:MM:SS
4 MM/DD/YY HH:MM:SS  9 MM/DD/YY HH:MM:SS
5 MM/DD/YY HH:MM:SS  0 MM/DD/YY HH:MM:SS
               <<        >>       Exit
```

Figure 3.18 Power Interruptions Screen

A power interruption event is logged when it lasted for more than 1 minute. A maximum of ten events are logged. If more than ten events occur, the tenth (0) is over written with the most recent.

3.4 Sample QA/QC Procedures

Certain quality control checks must be conducted at the time of sample setup and at monthly or quarterly intervals thereafter. Carry out these checks before making any adjustments to the sampler. Record information about the site, the sampler and the results of scheduled or special (unscheduled) quality control checks on a QA/QC Report Form. This report form originates at the field site, and the site operator should keep the original on file and copies to others. Any actions taken to service or calibrate the SASS sampler, after the check should be recorded in brief on the form and in detail in the field operators notebook.

3.4.1 Date and Time Checks

Conduct these checks monthly or whenever daylight savings time changes occur. Compare the date and time displayed on the sample to the known data and to an accurately set watch. Record date and time check information on the QA/QC data form.

3.4.2 Monthly Leak Check

Performed upon startup, and then monthly, see procedure in Section 6.0 of this manual

3.4.3 Monthly Temperature Check

Performed upon startup and then monthly, check the ambient and filter temperature sensors of the sample by positioning the probe of a certified transfer standard digital thermometer in close proximity to the sample sensors. Allow time to achieve stable readings and record the results in the field notebook and the QA/QC report form. If the sample and control check temperature readings differ by more the +/- 2°C, trouble shoot the system and recheck. If still out of tolerance, conduct a two-point calibration as described in Section 6.0, or replace the faulty sensor.

3.4.4 Quarterly Temperature Check

Performed each calendar quarter, follow the procedure for the calibration of the temperature probe as described in Section 6.0 of this manual. It should be compared against a certified NIST calibrated standard. Should a temperature sensor not maintain its calibration after the monthly or quarterly checks, maintenance and/or replacement of the faulty parts must occur.

3.4.5 Monthly Pressure Check

Compare the ambient barometric pressure readout from the sampler display screen with the reading from a certified transfer standard barometer. If the pressure readings differ by more than +/- 10 mm Hg, perform a calibration of the pressure sensor as described in Section 6.0 of this manual or if necessary replace the faulty sensor.

3.4.6 Quarterly Pressure Check

Performed each calendar quarter, follow the procedure for calibration of the pressure sensor as described in Section 6.0 of this manual. It should be compared to a certified NIST calibrated pressure standard. Should the pressure sensor not maintain its calibration after the monthly or quarterly checks, maintenance and/or replacement of the faulty parts must occur.

3.4.7 Monthly Flow Rate Check

Performed upon startup, and then monthly, see procedure in Section 6.0 of this manual. If the flow deviation exceeds +/- 10% (+/- 0.67 LPM) [24] then troubleshoot the problem to determine the cause of the change.

3.4.8 Quarterly Flow Rate Check

Performed each calendar quarter, follow the procedure for calibration of the flow sensor as described in Section 6.0 of this manual. It should be compared to a certified NIST calibrated flow reference standard. Should the flow sensor not maintain its calibration after the monthly or quarterly checks, maintenance and/or replacement of the faulty parts must occur.

4.0 MICROPROCESSOR MENUS AND SCREENS

Super SASS uses a series of intuitive menus to lead the operator through the setup, calibration, operation and data recall. Review the following section for a complete overview of the menu system.

Super SASS includes an Event Manager for the most flexible operation. An Event Manager will maintain a pre-event list, up to four (4) pre-events are allowed. Twenty-four (24) post events are archived in a circular manner where the oldest is overwritten by the newest addition. User selectable menus are designed to allow automatic timed sample events or manual on and off settings for calibration. Many menus and windows give current sampler information of ambient temperature, filter canister temperature, barometric pressure, sample flow rates and any error messages.

4.1 Main Screen

When the SASS or SuperSASS, is first powered up the user will see the MAIN SCREEN. The version number and system identification, as well as the choices Operate, Setup, Calibrate and Transfer Data are displayed.

Keys directly below the screen are associated with the screen text; these keys are called “soft keys”, because their function changes as the software changes. Keys F1 to F6 are called function keys.

```
     Super SASS Speciation Sampler
              V 4.02

       Met One Instruments, Inc
            www.metone.com
                              Transfer
Event     Setup     Calibrate    Data
```

Figure 4.1 Main Screen

Event Menu Screen:
The Event menu is used to view all previous data and event results that have occurred. Up to 24 previous events can be stored in the memory of the SASS control box. From the Event menu, either current or previous sample event data can be viewed.

Setup Menu Screen:
Setup Menu is used to program into the control box the time and date of events, set the clock, customize the default menu, set the identification number and clear all event memory.

Calibration Menu Screen:
This menu contains the various calibration screens and test functions.

Transfer Data:
Provides data save menu using the accessory transfer module. It can also be used to verify the transfer of data via the RS-232 port. When communications is active, the transfer information is displayed in this screen.

4.2 Event Menu

From the Main Screen, press the EVENT key. The Event section provides the user with current operating conditions and post event summaries.

The Event menu screens are arranged in a closed circle. Select the major section of choice using the Function Keys and then scroll to other screens listed in the Event Menu using the << and >> arrow keys.

Select your choice by pressing the associated Function Key.

```
Event Menu
F1: Current Event Status
F2: Previous Event Summary
F3:
F4: Event Manager
F5:
F6: Historical Event Summary
                                Exit
```

Figure 4.2 Event Menu

The event menu provides selections for viewing the results of current and post events.

4.2.1 Current Event Status

By pressing the “**F1**”This particular status screen provides the user with the current operating conditions of the SASS sampler. When a sampling event is in progress, the data available for viewing is the current event data.

From this screen, the operator can access the current event that was most recently completed or the current event that is in progress. During operation of the SASS, there are two variations of the screen label that will appear depending upon the current operational sequence in the event. They are identified in the Status line as **Finished,** and **Sampling.** The Status line values are shown in reverse video on the screens.

```
Status: Finished       MM/DD/YY HH:mm:ss
06        Canister Set: (1,2,3)
          Event Start: MM/DD/YY HH:mm:ss
          Event  Stop: MM/DD/YY HH:mm:ss
          Event Length:         HH:mm:ss


              <<        >>       Exit
```

Figure 4.3 Finished Status Screen

From this screen only, the >> and << arrow hot keys can be used to navigate through the various status and summary screens. The current event number appears under the status label at the left hand top corner of the display screen.

If there is a test in progress, the sampling screen will appear indicating the current status of the event that is currently in progress.

```
Status: Sampling       09/11/00 11:43:22
07         Canister Set: (1,2,3)
          Event Start: 09/11/00 00:00:00
          Event  Stop: 09/11/00 24:00:00
          Elapsed:              11:42:22
          Remaining:            12:17:38

               <<        >>       Exit
```

Figure 4.4 Sampling Status Screen

Menu Item Descriptions:

Soft Key	Description
Exit	The Exit key when pressed will exit the current menu and return to the event menu screen as seen in Figure 4.2
<< And >>	Selection of these keys step through the various status and summary screens for the current event, or when there are no running events, the just finished event will be displayed.
Status	**Description**
Sampling	During this state the line 6 display is: Remaining: HH:mm:ss Where the time displayed is the Event Stop time minus the current time. In other words, the time remaining until the pump is turned OFF and sampling stops. Stays in this state until the current time is greater or equal to the Event Stop time, and then the status is set to the Stopping state.
Finished	During this state Data logging continues.

To view the current data relating to the test that is in progress, the >> key can be used to go to the next status screen

Current Data Screen

This screen shows the current operating conditions of flow, temperature, filter temperature and pressure. The pump status is shown in the lower right of the screen. It will display only those canisters that are installed for the current event. Use the >> key to advance to the next screen.

```
Current                MM/DD/YY HH:MM:SS
Ambient P   xxx mmHg   Ambient T –xx.x C
   Flow 1  xx.x Lpm    Filter 1  –xx.x C
   Flow 2  xx.x Lpm
   Flow 3  xx.x Lpm
   Flow 4  xx.x Lpm
   Flow 5  xx.x Lpm       Pump:   ON
             <<        >>       Exit
```

Figure 4.5a Current Data Screen (SASS)


```
Current                MM/DD/YY HH:MM:SS
Ambient P   724 mmHg   Ambient T  24.4 C
   Flow 1  xx.x Lpm    Filter 1   24.5 C
   Flow 2  xx.x Lpm    Filter 2   24.3 C
   Flow 3  xx.x Lpm    Filter 3   24.3 C
   Flow 4  xx.x Lpm    Filter 4   24.2 C
                        Pump:   ON
             <<        >>       Exit
```

Figure 4.5b Current Data Screen (SuperSASS)

Average Screen

The Super SASS logs data at the U.S. EPA setting of 5 minutes. In the Average screen, the user can view the last calculated average. Included are the last average time and all data values for the sample: flow, temperature, filter temperature and barometric pressure. These are displayed for the current configuration of canisters being used.

```
5 Min. Values          MM/DD/YY HH:MM:SS
Ambient P   xxx mmHg   Ambient T –xx.x C
   Flow 1  xx.x Lpm    Filter 1  –xx.x C
   Flow 2  xx.x Lpm
   Flow 3  xx.x Lpm
   Flow 4  xx.x Lpm
   Flow 5  xx.x Lpm       Pump:   ON
             <<        >>       Exit
```

Figure 4.6a Average Screen (SASS)

```
5 Min. Values          MM/DD/YY HH:MM:SS
Ambient P   xxx mmHg   Ambient T –xx.x C
   Flow 5  xx.x Lpm    Filter 5  –xx.x C
   Flow 6  xx.x Lpm    Filter 6  –xx.x C
   Flow 7  xx.x Lpm    Filter 7  –xx.x C
   Flow 8  xx.x Lpm    Filter 8  –xx.x C
                        Pump:   ON
             <<        >>       Exit
```

Figure 4.6b Average Screen (SuperSASS)

This screen always displays the 5-minute values from the current event in progress or when there is no event in progress, it is the data for the previous event. This data is not applicable for recording on the post event data report. Be careful that these screens are not confused with the event summary data that should be recorded on the transfer of custody or data result forms.

Menu Item Descriptions

Soft Key	Description
Exit	The Exit key when pressed will exit the current menu and return to the event menu screen as seen in Figure 4.2

<< And >>	Selection of these keys step through the various status and summary screens for the current event, or when there are no running events, the just finished event will be displayed.
Status	**Description**
Ambient P	Displays the 5-minute average of barometric pressure for the current event.
Ambient T	Displays the 5-minute average of ambient temperature for the current event.
Flow n-n	Displays the 5-minute average of the flow in Lpm for the current event, the number of flows values displayed will depend upon the number of installed canisters.
Filter n-n	Displays the 5-minute average of the filter temperatures for the current event. There is only a single temperature for the SASS unit, canister #1

The screens shown in figures 4.5 and 4.6 are the two key screens that display data being collected for the event that in progress. Additional screens that can be viewed are described in section 4.2.2

4.2.2 Previous Event Summary Screen

This screen is selected from the event menu in figure 4.2 by using the "F2" key. It is used to show the recorded results of the previous event that has just finished. In some test sequences, the displayed previous event is the same as the current event. This can occur when there is not another event in progress and there is not one scheduled. It should also be noted that only the data results for the number of installed canisters would be displayed in the various screens.

The previous event summary is the primary source of information for the collection of data that is transcribed to the transfer of custody form or other documentation related to the recent event.

The sequence number of the event is listed in the upper left hand corner, just below the status label. The << and >> arrow hot keys are used to sequence through the various screens containing the status, summary and warnings data. The following status screen "finished" is the home display.

```
Status: Finished        MM/DD/YY HH:mm:ss
06          Canister Set: (1,2,3)
          Event Start: MM/DD/YY HH:mm:ss
          Event  Stop: MM/DD/YY HH:mm:ss
          Event Length:         HH:mm:ss


              <<        >>       Exit
```

Figure 4.7 Status Screen

The remainder of the screens that display data results can be viewed by selecting the >> key from the status screen. The first two screens were previously shown in figures 4.5 and 4.6. They are only relevant for the display of current data that is being collected during an event that is in progress. Skip past them to the summary screen, which contains the information that needs to be transcribed to the transfer of custody form as seen in appendix B.

Volume Summary Screen

The volume summary screen has the information about the average pressure, volumes, the ambient temperature as well as filter temperature summary. This screen and the following screens provide information that may be required for chain of custody forms, or other documents used to document the results of the previous sample event. The number of individual items will vary depending upon the number of installed canisters used during each test sequence. Use the >> key to advance to the next screen.

```
Volume Summary          MM/DD/YY HH:MM:SS
Ambient P   xxx mmHg    Ambient T –xx.x C
Volume 1  x.xxx m3      Filter 1  –xx.x C
Volume 2  x.xxx m3
Volume 3  x.xxx m3
Volume 4  x.xxx m3
Volume 5  x.xxx m3
              <<        >>       Exit
```

Figure 4.8a Volume Summary Screen (SASS)

```
Volume Summary          MM/DD/YY HH:MM:SS
Ambient P   xxx mmHg    Ambient T –xx.x C
Volume 5  x.xxx m3      Filter 5  –xx.x C
Volume 6  x.xxx m3      Filter 6  –xx.x C
Volume 7  x.xxx m3      Filter 7  –xx.x C
Volume 8  x.xxx m3      Filter 8  –xx.x C

              <<        >>       Exit
```

Figure 4.8b Volume Summary Screen (SuperSASS)

Menu Item Descriptions

Soft Key	**Description**
Exit	The Exit key when pressed will exit the current menu and return to the event menu screen as seen in Figure 4.2
<< And >>	Selection of these keys step through the various status and summary screens for the current event, or when there are no running events, the just finished event will be displayed.
Status	**Description**
Ambient P	Displays the average barometric pressure for the event.
Ambient T	Displays the average of ambient temperature for the event.
Volume n-n	Displays the total volume in cubic meters for the event. The number of displayed channels will depend upon the number of installed canisters.
Filter n-n	Displays the average filter temperatures for the event, only a single filter temperature for the SASS unit.

CV Summary Screen

CV is the Coefficient of Variance is equal to the Standard Deviation divided by the Mean times 100. The units are in percent. The number of displayed flow values will vary with the number of installed canisters. To advance to the next screen, use the >> key.

```
CV Summary              MM/DD/YY HH:MM:SS
          CV      Mean       Std Dev
 Flow 1       %        Lpm        Lpm
 Flow 2       %        Lpm        Lpm
 Flow 3       %        Lpm        Lpm


              <<        >>       Exit
```

Figure 4.9 CV Summary Screen

Menu Item Descriptions

Soft Key	Description
Exit	The Exit key when pressed will exit the current menu and return to the event menu screen as seen in Figure 4.2
<< And >>	Selection of these keys step through the various status and summary screens for the current event, or when there are no running events, the just finished event will be displayed.
Status	**Description**
Flow n-n	Displays the coefficient of variance, the mean and the standard deviation of the flow for the entire event. Only the flows for the installed canisters will be displayed in both SASS and SuperSASS.

Min/Max Summary Screen

The Min/Max Summary screen provides the maximum and minimum values recorded during the previous event. Each indicates the date and time of the occurrence of the maximum and minimum values. In the SASS unit, there is only a single filter temperature max/min value available. Use the >> key to advance to the next screen.

```
Min/Max Summary         MM/DD/YY HH:MM:SS
Ambient T Max   22.4 C  MM/DD/YY HH:MM:SS
          Min   19.5 C  MM/DD/YY HH:MM:SS
Filter 1T Max   23.3 C  MM/DD/YY HH:MM:SS
          Min   19.3 C  MM/DD/YY HH:MM:SS
Ambient P Max  730 mmHg MM/DD/YY HH:MM:SS
          Min  630 mmHg MM/DD/YY HH:MM:SS
              <<        >>       Exit
```

Figure 4.10 Min/Max Summary Screen

Use the up/down keys to select the SuperSASS filter canister number to display max/min data.

Menu Item Descriptions

Soft Key	Description
Exit	The Exit key when pressed will exit the current menu and return to the event menu screen as seen in Figure 4.2
<< And >>	Selection of these keys step through the various status and summary screens for the current event, or when there are no running events, the just finished event will be displayed.
Up / Down	Use to select the specific canister filter temperature to display. This is only active in the SuperSASS. SASS provides a single temperature max/min value.
Status	**Description**
Ambient T Max/Min	Displays the maximum and minimum values for the ambient temperature and the time and date of occurrence since the beginning of the event.
Filter x T Max/Min	Displays the maximum and minimum values for the filter temperature and the time and date of occurrence since the beginning of the event. Use the up and down arrow keys to select individual canisters.
Ambient P Max/Min	Displays the maximum and minimum values for the barometric pressure and the time and date of occurrence since the beginning of the event.

Filter dT Summary Screen

The filter dT summary screen displays the maximum temperature difference between the ambient temperature and the filter temperature. In addition to recording the maximum temperature difference, it also indicates the date and time of the maximum value. These value will continue to change and will be and indication of the values up to the time the canisters are removed from the SASS. The SASS unit provides a single Max dT value for canister #1, while the SuperSASS provides a Max dT value for each canister used in the sample event.

Use the >> key to advance to the next screen.

```
Filter dT Summary      MM/DD/YY HH:MM:SS
Max dT
 1 –xx.x C    MM/DD/YY HH:mm:ss
 2 –xx.x C    MM/DD/YY HH:mm:ss
 3 –xx.x C    MM/DD/YY HH:mm:ss


              <<        >>       Exit
```

Figure 4.11 Filter dT Summary Screen

Menu Item Descriptions

Soft Key	Description
Exit	The Exit key when pressed will exit the current menu and return to the event menu screen as seen in Figure 4.2

<< And >>	Selection of these keys step through the various status and summary screens for the current event, or when there are no running events, the just finished event will be displayed.
Status	**Description**
Max dT	Displays the maximum difference between the ambient temperature and the filter temperature. Includes time and date of occurrence since the beginning of the event.

Warnings Screen

This screen displays any warnings that indicate that the length of the test was out of tolerance or the difference temperature between the ambient and the filter exceeded the preset limit.

A Filter Error display of NO indicates no flow errors. A Filter Error display of YES indicates a filter temperature error that is greater than 5 degrees Celsius from the ambient temperature. On the SASS only a single dT warning would be displayed, for SuperSASS a dT warning can be displayed for each canister used in the sample event.

```
Warnings                MM/DD/YY HH:MM:SS
Elapsed Time: YES  HH:mm:ss < 23:00:00
Filter dT
 1   YES    -xx.x C    MM/DD/YY HH:mm:ss
 2   YES    -xx.x C    MM/DD/YY HH:mm:ss
 3   YES    -xx.x C    MM/DD/YY HH:mm:ss

              <<        >>       Exit
```

Figure 4.12 Warnings Screen

Menu Item Descriptions

Soft Key	Description
Exit	The Exit key when pressed will exit the current menu and return to the event menu screen as seen in Figure 4.2
<< And >>	Selection of these keys step through the various status and summary screens for the current event, or when there are no running events, the just finished event will be displayed.
Status	**Description**
YES - NO	NO indicates that there were no errors, a YES indicates that an error occurred or the dT was exceeded.
Elapsed Time	The elapsed sample time is out of range – less than 23 hours or greater than 25 hours.
Filter dT	Filter temperature differential is out of specifications and it's time and data of occurrence. The filter temperature exceeded the ambient temperature by more than 5° C for more than 30 minutes during either the sampling or post sampling period of operation.

Flow Warnings Screen

The displayed flows for each sample canister are constantly adjusted to the required "actual" volumetric flow based on actual site conditions using the ambient filter temperature and the barometric pressure. In SASS there can be a maximum of 5 flows, while there are 4 for the SuperSASS. The actual number of channels displayed will depend upon the number of canisters used for the sample event.

```
Flow Warnings          MM/DD/YY HH:mm:ss
                 Lpm
   Flow 1: Yes   xx.x MM/DD/YY HH:mm:ss
    Flow 2:  No
    Flow 3:  No
    Flow 4:  No

              <<        >>       Exit
```

Figure 4.13 Flow Warnings Screen

Menu Item Descriptions

Soft Key	Description
Exit	The Exit key when pressed will exit the current menu and return to the event menu screen as seen in Figure 4.2
<< And >>	Selection of these keys step through the various status and summary screens for the current event, or when there are no running events, the just finished event will be displayed.
Status	**Description**
YES - NO	NO indicates that there were no errors, a YES indicates that there was a error in flow rate.
Flow 1-8	Sample flow rate out of spec, its value, and its time and date of occurrence. The flow rate exceeded a range of +/- 10 percent of the average flow rate for the sample period for more than 5 minutes.

Power Interruptions Screen

A power interruption event is logged when it lasted for more than 1 minute. A maximum of ten events are logged. If more than ten events occur, the tenth (0) is over written with the most recent. The time and date of each event is logged as part of the power interruptions summary.

```
Power Interruptions     MM/DD/YY HH:MM:SS

1 MM/DD/YY HH:MM:SS   6 MM/DD/YY HH:MM:SS
2 MM/DD/YY HH:MM:SS   7 MM/DD/YY HH:MM:SS
3 MM/DD/YY HH:MM:SS   8 MM/DD/YY HH:MM:SS
4 MM/DD/YY HH:MM:SS   9 MM/DD/YY HH:MM:SS
5 MM/DD/YY HH:MM:SS   0 MM/DD/YY HH:MM:SS
              <<        >>       Exit
```

Figure 4.14 Power Interruptions Screen

This is the last summary screen, pressing the >> key will return to the finished status screen as seen in figure 4.3.

4.2.3 Event Manager Screen

Selecting the event manager screen using the "**F4**" key will go directly to the event manager that is part of the setup menu. This shortcut can be used to view the events currently programmed into the SASS, or to add, modify or delete events from the system. Exiting the event manager will return to the setup screen and does not return to the event menus. See Section 4.3 for details on the using the event manager.

4.2.4 Historical Event Summary Screen

The historical event summary screen allows for viewing of post events. A maximum of 24 post events can be stored in memory before they are over written by a new event. The menu is identical to that of the previous event summary screen as seen in figure 4.7. The key difference is that the event number can be selected from the historical event summary; while in the previous event summary it only shows the most recently completed event. The event number is displayed below the Status label in the upper left hand corner of the screen. The various screens available are the same as described in section 4.2.2, except they are for the selected post event.

```
Status: Finished       MM/DD/YY HH:mm:ss
06          Canister Set: (1,2,3)
          Event Start: MM/DD/YY HH:mm:ss
          Event  Stop: MM/DD/YY HH:mm:ss
          Event Length:         HH:mm:ss


              <<        >>       Exit
```

Figure 4.15 Status Screen

Menu Item Descriptions:

Soft Key	Description
Exit	The Exit key when pressed will exit the current menu and return to the event menu screen as seen in Figure 4.2
<< And >>	Selection of these keys step through the various status and summary screens for the current event, or when there are no running events, the just finished event will be displayed.
Up / Down	Use the Up and Down arrow keys to select the event summary to view, the most recent event will always be the starting point. Use the up arrow to go to the next older event.
Status	**Description**
Finished	Indicates that this is a completed event.

4.3 Setup Menu

The setup menu is used to setup the various event, defaults, date and time, the unit ID as well as provide a way to clear from the SASS memory all event history. The setup menu screen shown in figure 4.16 is displayed, when the setup key from the main menu is selected.

```
Setup Menu
F1: Event Manager
F2: Event Defaults
F3: Clock
F4: Unit ID
F5: Clear Event History
F6: Flow Sensors
                                  Exit
```

Figure 4.16 Setup Menu Screen

Use the function keys to access the various menu selections. To return to the main menu, the exit key can be selected.

4.3.1 Event Manager screen

The event manager allows for the programming of the events or test sequences that will be processed by the SASS unit. Up to four events can be programmed to occur at the prescribed date and time. In addition to the date, time and length of the event, the set of canisters that will be used during each event can be programmed. The SASS unit provides only a single set of canisters, typically (1,2, & 3) that can be programmed for future sample events. The SuperSASS allows for sequential sampling, so that a new sample event can begin using an alternate set of canisters while the original canisters are still inplace.

```
Event Manager          MM/DD/YY HH:mm:ss
Start Date/Time    Length  Canisters
MM/DD/YY HH:mm:ss  HH:mm   {1,2,3}
MM/DD/YY HH:mm:ss  HH:mm   {5,6,7}



   Add      Modify    Delete     Exit
```

Figure 4.17 Event Manager Screen

Only active pre-events are listed. They are ordered (top to bottom) by the earliest date and time. Up to four (4) pre-events can be listed. Use the up and down arrows to select an event for modification or deletion. Then use the Modify or Delete action keys to perform the function on the selected event. If there are less than 4 pre-programmed events then the Add key will bring up the Add Event screen.

Menu Item Descriptions

Soft Key	Description
Add	This key is used to add an event to the system
Modify	Once selected an event can be modified using this key selection.

Delete	This key allows for the deletion of an event from the event queue.
Exit	Used to exit the menu to the event manger screen (Figure 4.16)
Up / Down	The arrow keys are used to select an event for modification or deletion.

Add Event Screen

The add event screen is used to add and event to the pre-event list or to enter the first event into the SASS unit. This menu is used to edit the Event Start date and time, Event Length time, and the Canister Set. Current date and time are shown in the upper right hand corner of the screen. While the canister set of the SASS cannot be sequenced, the configuration of the installed canisters for the sample event needs to be indicated. The dynamic nature of the various screens requires that the configuration be defined for the test, so that it can be properly displayed on the screens. Typically as part of the EPA test plan, SASS canister set {1,2 & 3} will be used. This is also the default set. The Canister Set is a pick list of defined sets as shown below.

Defined sets for SASS are:

{1}, {1,2}, {1,2,3}, {1,2,3,4}, {1,2,3,4,5}

Defined sets for Super SASS are:

{1}, {2}, {3}, {4}, {1,2}, {3,4}, {5,6}, {7,8}, {1,2,3}, {5,6,7}, {1,2,3,4}, and {5,6,7,8}.

Press the Add button to add this event to the pre-event list. A successful add will return the user to the Event Manager screen.

```
Add Event            12/14/00  08:34:09
                     MM/DD/YY  HH:mm
        Event Start: 12/15/00  00:00
       Event Length:           24:00
       Canister Set: {1,2,3}


  Add               Default    Cancel
```

Figure 4.18 Add Event Screen

Menu Item Descriptions

Soft Key	**Description**
Add	This key is used to add this event to the pre-event list.
Default	Selection will automatically enter the preset default values as described in figure listed in the section “Event Defaults”
Cancel	This key allows the user to cancel the add function and returns to the event manager screen.
Term	**Description**
Event Start	This is the start date and time for the event. Use arrow keys to move and edit values. Selection of default will automatically enter the default value

	for this event.
Event Length	This is the length of the event in hours and minutes. Use arrow keys to move and edit the values. Selection of default will automatically enter the default value for this event.
Canister Set	This is the set of canisters to be used during this event. Using the up and down arrow keys to select the set of canisters. See listing above for choices of canisters grouped in sets.

Modify Event Screen

The modify event screen is used to modify an event in the pre-event of the SASS unit. This menu is used to modify the Event Start date and time, Event Length time, and the Canister Set. Current date and time are shown in the upper right hand corner of the screen. The Canister Set is a pick list of defined sets as previously described.

Press the Save button to commit changes to the event. A successful save will return the user to the Event Manager screen.

```
Modify Event         12/14/00  18:23:05
                     MM/DD/YY  HH:mm
        Event Start: 12/15/00  00:00
       Event Length:           24:00
       Canister Set: {1,2,3}


  Save               Default    Cancel
```

Figure 4.19 Modify Event Screen

Menu Item Descriptions

Soft Key	**Description**
Save	This key is used save the modified event to the pre-event list.
Default	Selection will automatically enter the preset default values as described in figure listed in the section “Event Defaults”
Cancel	This key allows the user to cancel the add function and returns to the event manager screen.
Term	**Description**
Event Start	This is the start date and time for the event. Use arrow keys to move and edit values. Selection of default will automatically enter the default value for this event.
Event Length	This is the length of the event in hours and minutes. Use arrow keys to move and edit the values. Selection of default will automatically enter the default value for this event.
Canister Set	This is the set of canisters to be used during this event. Using the up and down arrow keys to select the set of canisters. See listing above for choices of canisters grouped in sets.

Delete Event Screen

If the delete event from the event manager screen is selected, the following caution screen will appear. It is used to warn the operator that they are about to remove an existing sample event. Select the appropriate key to delete the event or the cancel key to return to the events manager screen.

```
...............Caution................

Press 'Delete' to remove the selected
sample event.



  Delete                        Cancel
```

Figure 4.20 Delete Event Screen

4.3.2 Event Defaults screen

This menu allows the operator to set default values into the system. These values will be used whenever the default is selected from the add or modify event screens shown in figures 4.18 and 4.19. Defaults are selected for event length and canister set. A list of canister sets can be found in the add events section of figure 4.18. Use the arrow keys to select the value to change. Use Save key to save the default values or the Exit key to leave them as they are.

```
Sample Event Defaults
                        HH:mm
          Event Length:  24:00
          Canister Set: {1,2,3}




  Save                          Exit
```

Figure 4.21 Sample Event Defaults Screen

4.3.3 Clock Setup Screen

The clock screen shows the current date and time setting of the SASS at the upper right of the screen. Using the left and right arrow keys scroll to the settings to be changed, change using the up and down arrows. After setting to the correct date and time press the SET key. Notice that the SASS time is changed to the current settings. It is best to set the new clock time to a future time, and then hit the set key when the new set time has been reached.

```
Clock Setup            12/24/00 11:10:35
      MM/DD/YY
Date: 12/24/00

      HH:mm:ss
Time: 11:30:22

   Set                            Exit
```

Figure 4.22 Clock Setup Screen

4.3.4 Unit ID Screen

The SASS is identified by a station number (ID). This is set by the factory to match the last four digits of the SASS serial number. The ID number marks the retrieved data from the SASS. Data retrieved from multiple samplers are identified by a unique ID number. Every SASS unit has its own ID number, from 0 to 9999. Press the SAVE key to save changes to the Unit ID.

```
Unit ID

Unit ID: 4585




   Save                           Exit
```

Figure 4.23 Unit ID Screen

4.3.5 Clear Event History Screen

The clear event history screen can be used to remove all archived events as well as all logged data that has been collected during the archived events. This function should only be used when all data in the SASS has been collected and archived on other media such as a PC Computer. The clear will delete any current test in progress as well as any events in the event queue. Use this command with caution to prevent the loss of data.

```
...............Caution................

Press 'Clear' to erase current and
All archived events and data log data.



  Clear                         Cancel
```

Figure 4.24 Clear Event History Caution Screen

4.3.6 Flow Sensors Screen

Flow sensor types are only changed if a flow sensor must be replaced. Instructions are provided with the flow sensor that provide correct configuration. The SASS can use 2 types of mass flow meters—10 or 20 LPM full scale. Edit to select the appropriate type. This configuration normally done at the factory, but it may become necessary to make a change if a field replacement is of a different type than the original. The SASS will have 5 sensors compared to SuperSASS 4 sensor channels. Press Save to save or Exit to leave the menu.

```
Flow Sensors
Sensor Type
 1  10 LPM FS
 2  10 LPM FS
 3  10 LPM FS
 4  10 LPM FS

  Save                           Exit
```

Figure 4.25 Flow Sensors Screen

4.4 Calibration Menu

This menu contains the calibration and test screen selection. Using the functions keys F1 to F4 the various types of test and calibration sub menus can be found. The system test selection allows for the viewing of physical parameters temperature, and flow on all system channels.

```
Calibrate Menu
F1: System Test
F2: Flow Calibration
F3: Temperature Calibration
F4: Pressure Calibration
F5:
F6:
                                Exit
```

Figure 4.26 Calibrate Menu

4.4.1 System Test Screen

The system test screen shows all of the measured parameters in real time. Its primary function is to allow testing of the system as part of the preliminary checkout of the SASS. It is also useful for the troubleshooting of the SASS when problems may have been detected or for general maintenance of the unit.

```
System Test            MM/DD/YY HH:MM:SS
Ambient P   xxx mmHg   Ambient T –xx.x C
   Flow 1  xx.x Lpm    Filter 1  –xx.x C
   Flow 2  xx.x Lpm
   Flow 3  xx.x Lpm
   Flow 4  xx.x Lpm
   Flow 5  xx.x Lpm      Pump:   ON
                        Pump     Exit
```

Figure 4.27a System Test Screen (SASS)

```
System Test            MM/DD/YY HH:MM:SS
Ambient P   xxx mmHg   Ambient T –xx.x C
   Flow 5  xx.x Lpm    Filter 5  –xx.x C
   Flow 6  xx.x Lpm    Filter 6  –xx.x C
   Flow 7  xx.x Lpm    Filter 7  –xx.x C
   Flow 8  xx.x Lpm    Filter 8  –xx.x C
                         Pump:   ON
   Cans                 Pump     Exit
```

Figure 4.27b System Test Screen (SuperSASS)

Menu Item Descriptions:

Soft Key	Description
Cans	This key allows the toggling of canister group {1,2,3,4} and group {5,6,7,8} for display on the screen. (SuperSASS Only)
Pump	This key allows the toggling of the pump from OFF to ON
Exit	Exits this menu to the calibrate menu screen

Status	Description
Ambient P	The current ambient barometric pressure in mm of Mercury
Ambient T	The current ambient temperature in degrees centigrade.
Flow x	Displays the current numbered canister flow in liters per minute, use Cans to view the alternate canister group.
Filter x	Displays the current numbered canister temperature in degrees centigrade, use Cans to view the alternate canister group. There is only a single filter temperature in the SASS unit.
Pump	Displays the current status of the pump.

4.4.2 Flow Calibration Screen

This menu is the first of the calibration screens that allow for the actual calibration of the SASS system. To perform a calibration of volumetric flow, a reference standard is required. This single point check is made on each individual flow channel. Selection of flow channel is done using the up and down arrow keys to select the number of the channel listed in label Chan.

```
Volumetric Flow Calibration

Chan  SASS   Ref        Type
 (1)    .0   6.7 LPM    10 LPM FS

             Pump: OFF

Calibrate    Pump     Default    Exit
```

Figure 4.28 Volumetric Flow Calibration Screen

Menu Item Descriptions:

Soft Key	Description
Calibrate	Set new calibration coefficients into memory. Before pressing this key, the pump should be ON and the desired SASS calibration reference reading entered in Ref.
Pump	This key allows the toggling of the pump from OFF to ON
Default	Restore factory default calibration values.
Exit	Return to the calibrate menu, see figure 4.26.
Term	**Description**
Chan	Flow sensor channel number, use up / down arrow keys to select 1 to 4 or 5
SASS	The current volumetric flow rate of the SASS unit.
Ref	This is the reference reading from the calibration standard being used to calibrate flow for the selected channel. This should be the volumetric flow value or the corrected value to volumetric flow.
Type	Flow sensor type either 10 LPM or 20 LPM full scale value
Pump	Indicates the current pump status, either ON or OFF

4.4.3 Temperature Calibration Screen

This screen provides the calibration screen for the calibration of the temperature monitoring system of SASS. To perform a calibration of temperature, a reference standard for a low value and a high value is required. Typically, the two points consist of a zero centigrade reading using an ice bath, and a high temperature using a high temperature bath with reference thermometer. The up/down keys are used to select the temperature sensor that is to be calibrated. The name in the upper left corner will either be listed as “ambient” for the outside temperature and “filter” for the specific canister temperature (1 to 8). The SASS unit has only a single canister temperature (1) while the SuperSASS has (8). Because this is typically a two-point test, a separate save function key is provided for the low and high temperature values.

```
(x) xxxxxxxx Temperature Calibration

SASS   Pt  Save   Reference
 21.9   1  -30.0  -30.0 C      Save(F1)
        2   50.0  050.0 C      Save(F4)


Calibrate             Default    Exit
```

Figure 4.29 Temperature Calibration Screen

Menu Item Descriptions:

Soft Key	**Description**
Calibrate	Set new calibration coefficients into memory. Before pressing this key, the desired SASS calibration reference reading for points 1 and 2 has been entered in Reference using the F1 and F4 keys.
Default	Restore factory default calibration values.
Exit	Return to the calibrate menu, see figure 4.26.
Save (F1)	Store the current low temperature reference reading to the Pt 1 entry.
Save (F4)	Store the current high temperature reference reading to the Pt 2 entry.
Term	**Description**
(x) xxxxxxx	Used to select the desired temperature channel. (0) Ambient or (1 to 8) for filter temperatures of individual canisters. SASS unit has (0 & 1) only.
SASS	The current measured temperature of the selected SASS temperature channel.
Pt	One point of a two-point calibration. Generally point 1 = low calibration value and point 2= high calibration.
Save	Saved un-scaled SASS temperature device reading associated with the corresponding reference value. Use F1 to save calibration value 1 and F4 to save calibration value 2.
Reference	Enter the low or high calibration value that the temperature probe is currently measuring. Allow sufficient time for the temperature probe and the reference to stabilize.

4.4.4 Pressure Calibration Screen

This screen provides the calibration screen for the calibration of the pressure sensor in the SASS unit. The pressure is used by the flow monitoring system to determine the volumetric flow from the measured mass flow sensors. To perform a calibration of pressure, a reference standard for a low value and a high value is required. Typically, the two points consist of a low reading of 600 mm of Hg and a high reading of 800 mm of Hg.

```
Pressure Calibration

SASS   Pt  Save   Reference
 730    1   735   600 mmHg      Save(F1)
        2   735   735 mmHg      Save(F4)


Calibrate             Default    Exit
```

Figure 4.30 Pressure Calibration Screen

Menu Item Descriptions:

Soft Key	**Description**
Calibrate	Set new calibration coefficients into memory. Before pressing this key, the desired SASS calibration references reading for points 1 and 2 have been entered in Reference using the F1 and F4 keys.
Default	Restore factory default calibration values.
Exit	Return to the calibrate menu, see figure 4.26.
Save (F1)	Store the current un-scaled pressure reading to the Pt 1. Save variable associated with the corresponding reference value.
Save (F4)	Store the current un-scaled pressure reading to the Pt2. Save variable associated with the corresponding reference value.
Term	**Description**
SASS	The current pressure reading of the SASS unit.
Pt	One point of a two-point calibration. Generally point 1 = low calibration value and point 2= high calibration.
Reference	Measured pressure reading of reference device, enter value in range 000 to 999 mm of mercury.
Save	Saved un-scaled SASS pressure device reading associated with the corresponding reference value. Use F1 to save calibration value 1 and F4 to save calibration value 2.

4.5 Transfer Data

This menu once selected from the main screen allows for the transfer of the SASS memory contents into the optional UX-961 Transfer Module. See Figure 5.1 Transfer Module. During direct connection to PC data transfers, the status of the transfer can be viewed when the transfer data screen is selected.

```
XMODEM File Transfer
              Status:
            Received:
           File Size:
              Packet:

 Transfer  Transfer
 History     All                 Exit
```

Figure 4.31 Xmodem File Transfer Screen

Menu Item Descriptions:

Soft Key	**Description**
Transfer History	Transfers all post event sample summaries to the transfer module. This file is approximately 16K bytes in size and transfers in XXX minutes.
Transfer All	Transfers all post event sample summaries as well as 5 minute logger data to the transfer module. This file is approximately 112K bytes in size and transfers in XXX minutes.
Exit	Exits this menu to the main menu screen
Status	**Description**
Status	Indicates status of either “Transmitting” or “Finished”
Received	Indicates the number of xmodem packets that have been received
File Size:	Indicates the files size transferred. (i.e. 114,688 bytes for All Transfer)
Packet	Packet number currently being transferred.

4.6 Error and Warning Screens

There are various screens used to indicate cautions and warnings to the user. These are used to prevent actions that might cause loss of data, or provide warning when an error condition occurs in the SASS unit. The following is a list of the common caution and warnings screens.

Link Down Warning Screen

This screen is displayed when communication has failed between the control box and the pump box. A failure is defined as no communication for more than 10 seconds. This screen will remain on the screen until the continue key is pressed. This error is caused by a number of conditions that can occur during the normal operation of the SASS System. It should be considered a problem when it has a duration that exceeds more than 5 minutes.

Link down warning: displays the date and time the event occurred.
Duration: displays the duration of the event. Press Continue to return to the Home screen.

```
...............Warning................

  Communication link down to pump box!

  Link down: MM\DD\YY  HH:mm:ss
   Duration: HH:mm:ss

 Continue
```

Figure 4.32 Link Down Warning Screen

Test Caution Screen

This caution screen occurs whenever the operator requests that the pump be turned on, when and event is scheduled in the system. It also appears when the pump is running and event and a stop request is made.

```
….............Caution….............

  Press ‘Continue’ to STOP the sample
  event and control the pump.



  Cancel                      Continue
```

Figure 4.33 Test Caution Screen

5.0 SAMPLER OPTIONS

5.1 Hand-Held Data Transfer Module

Met One Instruments Model UX-961 is a 12 volt DC self contained RS232 compatible data transfer module that can be carried to the field site by an operator to down-load the data that has been logged from the SASS. The device eliminates the requirement to carry a laptop computer to the field or manually transcribing data to a data sheet. The Module measures 6"L x 3"W x 1"H.

Figure 5.1 Transfer Module

The Data Transfer Module includes all RS-232 Interface cables and connections to interface with the RS-232 connection on the Control Unit. By selecting "Transfer Data" from the main screen menu, the transfer of information from the SASS to the transfer module will start. As data is transferred, the screen will indicate the progress of the transfer.

Once the data has been transferred to the module, it can then be taken to a PC computer where the special power supply and cable connects to the communications port on the computer. The SASSComm AQ Software is used on the PC to prepare reports in a format similar to that used by the EPA FRM Samplers.

5.3 Flow Rate Transfer Standard

Presently there are a number of commercial flow rate calibrators available from commercial manufacturers. Several use a patented "frictionless piston" and others a wet soap-bubble meter device. At present time, Met One believes the wet soap-bubble meter to be most reproducible and accurate, in laboratory conditions. For field use, the BGI, Model Delta Cal provides a single reference device for flow, temperature and pressure. In addition, several companies manufacture other types of transfer standard venturi flow devices. These are very accurate and can be used to calibrate the SASS. Please contact the factory for discussion of an accurate flow measurement device to use to calibrate the SASS. Adjustment of flow rates in the SASS should be consulted with the factory before made in the field.

5.4 Accessory Communications Items

Various accessory communications accessory items such as dial-up auto answer telephone modems, radio modems and cellular devices are available for the SASS. These are all designed to make the collection of data from the control unit easier. Additional information and details can be obtained from Met One Instruments, Inc.

6.0 MAINTENANCE, CALIBRATION, TROUBLESHOOTING

6.1 Maintenance

Very little maintenance is required for the operation of the SASS Sampler System. The following procedures should be followed for reliable continuous operation of the system. Most maintenance involves inspection of components for damage or wear, as well as performing regular checks and calibrations of the system. It is recommended that all maintenance and trouble shooting activities be recorded in the site notebook.

The SASS system contains both electronic and pneumatic components. Historically the vacuum pumps of most ambient air sampling systems require at least annual maintenance. The dual headed Thomas™ diaphragm pump used in the SASS can be removed by the operator from the field and new diaphragms and valves placed into the pump insuring another year of operation without failure.

The O-rings used in the SASS are made from Viton™ rubber. These O-rings should continue to provide a leak free system for several years. However, if leaks are detected during operation or during leak checking, these O-rings could be leaking. It is recommended to replace O-rings every two to three years depending on use and wear. However, they should be inspected on a regular basis

6.1.1 System Cleaning

Each time the system canisters are replaced, or as deemed necessary, the solar radiation shield of the sampler head should be cleaned with a wet cloth or, if required, a dilute soap and water solution. Dirt buildup on the shield can reduce the effectiveness of the reflective surface and cause the temperature to rise inside the shield.

The pump housing should be inspected and cleaned at least every quarter by removing the four screws on the corners and lifting the cover up and out of the way. Using a brush, or a compressed air source, clean the insides of the enclosure and in particular, the screen located below the pump assembly. When completed, replace the cover by tightening down the two screws located on the fan exhaust side first, and then "snug" the two screws on the opposite end of the enclosure.

The control box and cables should be inspected for damage or dirt and dust accumulation. The control box can be cleaned with a wet cloth or if required a dilute soap and water solution. The screen of the control box electronics should only be cleaned with a damp cloth, and no liquids should be allowed to enter the electronics package.

6.1.2 Denuder Replacement

Following the normal test sequence of the EPA Trends network, the MgO denuder will need replacement approximately every three months of operation or as required by the US-EPA. Under the EPA Trends program, the denuders are replaced by the third party vendor performing the analysis of the filters. The third party vendor is replacing filters and denuders in each canister; sufficient denuders should be supplied based on the three months of operation being typical. Details on the coating of the denuder can be found in the Appendix of this manual.

6.1.3 System Inspection

As part of the normal maintenance and operation, the various components of the system should be inspected for wear, damage, and changes in previous operation. Most inspections rely on visual checks during normal operation of the system. These should be performed each time anything is done to the system.

Each time the canisters are removed, check the O-rings of the canisters and those on the Sharp Cut Cyclone. Each time the cyclones are removed, unscrew the grit cap and dump out any dirt that may have collected as part of a routine maintenance program.

6.2 System Leak Check

The system can easily be checked for air leaks. Leak checks are done from the System Test screen.

```
System Test            01/19/01 15:30:00
Ambient P   735 mmHg   Ambient T  22.5 C
   Flow 1   6.7 Lpm    Filter 1   22.5 C
   Flow 2   6.7 Lpm
   Flow 3   6.7 Lpm
   Flow 4   6.7 Lpm Leak Test:   OFF
   Flow 5   6.7 Lpm      Pump:   ON
             Leak       Pump     Exit
```

System Test Screen (SASS)

```
System Test            01/19/01 15:30:00
Ambient P   735 mmHg   Ambient T  22.5 C
   Flow 1   6.7 Lpm    Filter 1   22.5 C
   Flow 2   6.7 Lpm    Filter 1   22.5 C
   Flow 3   6.7 Lpm    Filter 1   22.5 C
   Flow 4   6.7 Lpm    Filter 1   22.5 C
Leak Test: OFF           Pump:   ON
   Cans      Leak       Pump     Exit
```

System Test Screen (Super SASS)

Before a leak test can be done the flow control valves must be operating at 6.7 LPM (+/- 0.2). Check for this operating point by turning the pump ON and waiting at least 5 to 10 minutes for the 6.7 LPM operating point to be reached (Note: SASS units do not have flow control on channels 4 and 5). Once this operating point has been reached press the `Leak` button to put the unit in leak test mode (Note: The leak test mode turns OFF motor control to the flow control valves).

While the pump is operating and flow values are being displayed on the screen of the control unit, block off the inlet tube of the SCC (Sharp Cut Cyclone) of canister #1 mounted in the sample head. The flow value for Flow 1 should drop to a 0.0 or 0.1 SLM, indicating that there are no detected leaks in the components of the first canister. Continue this procedure for the remaining canisters and make sure the flow drops to a 0.0 or 0.1 SLM. If you are using a SuperSASS, next select the CAN key to switch to the other canister set if they are installed in positions 5 to 8. A flow reading greater than this, on any of the canister channels, indicates that there is a leak in that portion of the system. Testing individual sections of the system can identify the location of the leak.

1.0 Disconnect the vacuum line from the sample head at the side of the pump box. The flow for that channel should drop to 0.0 SLM. This indicates that the leakage path is between the pump and the sample head.

2.0 Reconnect the vacuum line to the pump box. Remove the canister from the sample head, and block off the vacuum line connection that would have inserted into the canister. One of the yellow cap plugs supplied on the canisters can be used for this. If the flow value drops to 0.0 SLM, then the leakage is either in the connection between this point and the canister or the SCC.

3.0 Remove the SCC from the canister and plug the bottom of the canister with one of the yellow cap plugs. Install the canister in the sample head and examine the flow value. It should drop to 0.0 SLM. It if indicates a leak then the seal between the sample head and the canister is at fault (check to see if the O-rings are in good condition). The other possibility is that the canister is not correctly assembled and a leakage path around the two sections of the canister exists. A 0.0 SLM reading would indicate the problem is in the SCC.

4.0 Replace the SCC on the canister; if the flow channel indicates a leak, then the problem is with the SCC. Verify that the O-ring seals on the SCC are intact and have not been damaged. If they are cut or have any other type of damage, they must be replaced. If the flow reads 0.0 SLM then the problem is fixed, and there is no leakage in the system. The original indication was probably caused by a poor initial connection when the canister or SCC was installed in the sample head.

This now verifies that the vacuum system is in intact and everything is working correctly.

.

6.3 Calibration

The calibration procedure performed in the field for the SASS is flow rate measurement, ambient filter, ambient temperature and barometric pressure measurement. Calibration procedures being adopted by the U.S. Environmental Protection Agency in the Draft document for Quality Assurance of $PM_{2.5}$ samplers should be adopted and used for the SASS.

Using a set of NIST traceable standards, for volumetric flow, barometric pressure and temperature, the SASS Unit can be easily calibrated using the calibration screens in the SASS Control Unit. From the main screen menu select the “Calibrate” key. This action will display the following Utility Menu Screen.

```
Calibrate Menu
F1: System Test
F2: Flow Calibration
F3: Temperature Calibration
F4: Pressure Calibration
F5:
F6:
                                Exit
```

Figure 6.1 Calibrate Menu Screen

6.3.1 Temperature Calibration

From the Utility Menu Screen shown in Figure 6.1, select the **F3** key on the control unit keyboard. This will bring up the Temperature Calibration Screen as shown below. Additional details on the various menu selections can be found in Section 4.4 of this manual.

```
(x) xxxxxxxx Temperature Calibration

SASS   Pt  Save   Reference
 21.9   1     .0  -30.0 C      Save(F1)
        2   22.0  050.0 C      Save(F4)


Calibrate             Default    Exit
```

Figure 6.2 Temperature Calibration Menu

Before beginning it will be necessary to have a reference temperature measurement device that has a calibration traceable to NIST or other approved calibration authority.

One good reference point for the ambient temperature sensor measurement is “ice point” (0°C / 32°F) the second being some elevated temperature above 20° C. During the summer, the local ambient may provide a suitable second temperature for calibration. The ice bath consists of a slurry of distilled water and ice chips that has been stirred to produce a 0°C temperature bath as measured with the reference thermometer. A wide mouth thermos bottle works well for the temperature tests.

From the menu of Figure 6.2, if the menu is not already in the “ambient” temperature measurement mode, use the arrow keys to move the cursor to the upper left hand selection and choose the “ambient” measurement.

The indication under the SASS menu item indicates the current ambient temperature, and this will be used to determine if the system needs to have the calibration changed.

Remove the ambient temperature probe from the shield by removing the three hexagonal nuts that hold the ring in place under the shield.

Now using the ice point bath with the reference thermometer, immerse the sensor portion of the ambient temperature probe 064-1 into the ice mixture. After about 1 minute of time to allow for stabilization, the measured value of SASS Ambient Temperature. The temperature should be within ±2°C of the reference thermometer.

Next using a second thermos bottle with a warm water mixture of approximately 30°C immerse the temperature probe and compare the reference thermometer in the bath with the measured value indicated for SASS Ambient Temperature. The temperature should be within ±2° C of the reference thermometer.

If both measurements are within the temperature tolerance then it is not necessary to calibrate the ambient temperature probe. If the temperature is in excess of the tolerance then use the following procedure to reset the calibration of the ambient temperature probe.

1. Insert the probe in the ice bath with the reference thermometer, and allow several minutes for the measurements to stabilize. It is best to try and stir the bath while both probes are in the ice mixture. When the probes are stable, enter the value measured from the reference thermometer in the top reference window. When completed press **F1** to save this value.
2. Now insert the probe in the heated water mixture and allow time for the probe and the reference thermometer to stabilize. When the probes are stable, enter the value measured from the reference thermometer in the second reference window. When completed press **F4** to save this value.
3. Now press the “Calibrate” key and the new values will be saved in memory of the control unit.
4. This calibrated the temperature probe to the reference thermometer. Re-run the temperature checks previously outlined and verify that at the two measurement points the temperatures are within the ±2° C tolerance. If they are not, then rerun the calibration test one more time.
5. If it fails the test a second, time, there is the possibility that the temperature probe is damaged, and will need to be replaced. If a new probe is installed, be sure to set the replacement probe using the “Default” menu selection. This will return to the original measurement factors.

This same procedure can also be used for the filter temperature measurement, except that for the temperature check, use the local ambient as a single reference point. From the temperature menu, use the arrow keys to change the value from 0 to 1 which will now indicated “Filter” Temperature. Insert a temperature probe into the open hole after canister #1 has been removed. Allow 10 minutes for the temperatures to stabilize, and then compare the reference thermometer with the filter temperature screen. They should be within ±2°C of each other. If the error is greater, then use the procedure outlined in steps 2-5 for this temperature probe. Except that the upper temperature is based on a reference thermometer placed near the filter temperature probe located above the canister. If this is a SuperSASS, continue this same procedure for the remaining 7 filter temperature probes.

6.3.2 Pressure Calibration

From the Utility Menu Screen shown in Figure 6.1, select the **F4** key on the control unit keyboard. This will bring up the Volumetric Flow Calibration Screen as shown below. Additional details on the various menu selections can be found in Section 4.4 of this manual.

```
Pressure Calibration

SASS   Pt  Save   Reference
 730    1     0   000 mmHg      Save(F1)
        2   730   730 mmHg      Save(F4)


Calibrate             Default    Exit
```

Figure 6.3 Pressure Calibration Screen

Comparing the current SASS pressure measurement with a reference barometer can make a preliminary check. The pressure indicated for the SASS should be within ±10 mm Hg of the reference pressure device. If the measurement is in excess of this value, then it may be necessary to re-calibrate the sensor in the SASS using a two-point barometric pressure measurement.

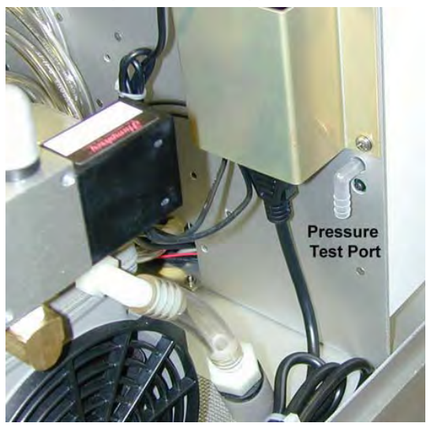

Figure 6.4 Pressure Test Port

To perform a pressure calibration, a few items will be required. This includes a precision barometer or other pressure-monitoring device that has a range of 600 to 800 mm Hg with accuracy in excess of 0.1mm Hg. Located inside the pump enclosure just under the power supply on the center wall on the pump side is a nylon right angle connection that attaches to the pressure transducer. This can be seen in Figure 6.4.

To perform a calibration, two measurement points will be necessary. This can be accomplished by using a syringe, some tubing, a tee, and the precision reference pressure device. See Figure 6.5 for detail of pressure test setup. Connect from the pressure test point to a tee connector using some tubing, one side of the tee goes to the pressure measurement device and the other to the syringe. The size syringe required is dependent upon the length (total air volume) of tubing used to make this test apparatus. The syringe is used to change the pressure inside the tubing from below ambient to above ambient. Adjust the syringe in and out to change the simulated test pressure measured by the reference device and transferred to the sensor inside the SASS. Two typical readings would be 600 and 760 mmHg. First verify that the syringe is able to adjust the simulated barometric pressure to 600 mmHg and 800 mmHg. Adjust the size of the syringe or the lengths of tubing to provide the necessary adjustments.

Once set begin the following sequence to calibrate the internal barometer to the reference standard.

1. Set the simulated pressure value to 600 mmHg as measured from the reference pressure sensor. When the measurement is stable, enter the value measured from the reference in the top reference window. When completed press **F1** to save this value.

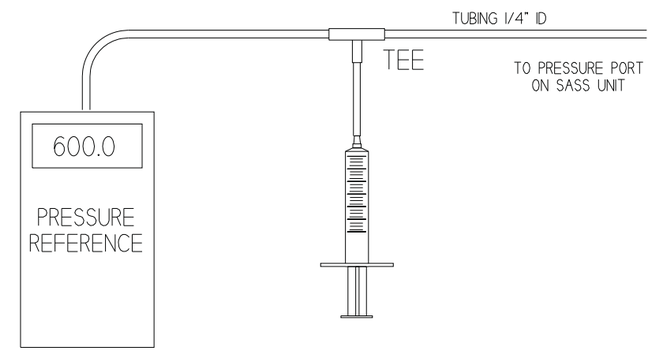

Figure 6.5 Pressure Test Setup

2. Now set the simulated pressure value to 800 mmHg as measured from the reference sensor. When the measurement is stable, enter the value measured from the reference in the second reference window. When completed press **F4** to save this value.

3. Now press the “Calibrate” key and the new values will be saved in memory of the control unit.

4. This calibrated the pressure sensor in the pump box to the reference barometer. Re-run the pressure checks previously outlined and verify that the new measurement is within the ±10 mmHg tolerance. If they are not, then rerun the calibration test one more time.

5. If it fails the test a second, time, there is the possibility that the pressure sensor is damaged, and will need to be replaced. If a new sensor is installed, be sure to set the replacement sensor using the “Default” menu selection. This will return to the original measurement factors.

Remove the test apparatus and log the results in the on site maintenance log.

6.2.3 Flow Calibration

From the Utility Menu Screen shown in Figure 6.1, select the **F2** key on the control unit keyboard. This will bring up the Volumetric Flow Calibration Screen as shown below. Additional details on the various menu selections can be found in Section 4.4 of this manual.

Note: There are only 4 flow channels in the Super SASS

```
Volumetric Flow Calibration

Chan  SASS   Ref        Type
 (1)    .0   6.9 LPM    10 LPM FS

             Pump: OFF

Calibrate    Pump     Default    Exit
```

Figure 6.6 Volumetric Flow Calibration Screen

Before beginning the calibration, it will be necessary to have some type of reference flow device that has a calibration that is traceable to NIST, or some other approved calibration authority. The best type of flow unit to use is one that is a direct reading device that has minimal inline flow restriction. Some of the flow measurement devices can restrict the flow, to a point that it is difficult to measure at the operating flow rate of the system.

It is recommended that the SASS pump be run for approximately 20 minutes to allow the flow system to reach operating temperature before performing a flow calibration.

Using a flow test device, and any adapter that might be necessary to adapt to the input tube of the SCC, measure the flow at each of the canisters. The SCC inlet adapter part number 8959 can be used. Using the Up/Down key select each of the flow line positions. The SASS has 5 flow monitors while the SuperSASS has 4 flow lines. In the SuperSASS these same four lines are also used by the second set of 4 sample canisters. These keys are used to change the channel being monitored. All measured flows, should be within ±0.67 LPM or ±10%[24] of the reference standard. The channels 4&5 of the SASS are set to ± 0.69 LPM or ±10%[24]. If any value is in excess of this tolerance, entering the value of the reference in the Reference position and then hitting the “Calibrate” key can calibrate the channel. This will enter in the correctly measured value for that channel. Use this same procedure for any other channels that may require recalibration. Record all changes to the system in the onsite logbook.

6.4 Troubleshooting

Since this is a new instrument, Met One Instruments will revise the operation manual to include additional troubleshooting steps and operator information as it becomes available. If your problem is not listed, please contact the Met One factory and ask for SASS Technical Service (541) 471-7111.

PROBLEM(S)	ACTION
Torn or suspect filter catch	1. Inspect filter holder and connections 2. Check sampler pneumatics
Out of specification (+/- 10% of transfer standard)	1. Completely remove flow rate measurement adapter; reconnect and perform flow rate check again. 2. Perform leak test 3. Check flow rate at three points to determine if flow rate problem with slope. 4. Recalibrate flow rate
Leak outside acceptable tolerance	1. Completely remove flow rate measurement adapter; reconnect and perform leak test again. 2. Inspect all seals and o-rings; replace as necessary and perform leak test again. 3. Check sampler with different leak test device.
Consistently low flows during sample runs	1. Check programming of sampler flow rate. 2. Check flow with a flow rate verification filter and determine if actual flow is low.
Out of specification (+/- 4°C of standard)	1. Recalibrate sensor; replace sensor.
Out of specification (+/- 10 mm Hg of standard)	1. Make certain pressure sensors are exposed to the ambient air and are not in direct sunlight. 2. Call local airport or other source of ambient pressure data and compare that pressure to pressure data from monitors sensor; pressure correction may be required. 3. Connect new pressure sensor.
Out of specification (+/- 5 min)	1. Check programming; verify power outages 2. Reset
Sample did not run	1. Check programming 2. Try programming sample run to start while operator is at site; ensure the transport filter is in the unit.
Power Interruptions	1. Check line voltage
Liquid-crystal display pen on, but sample not working.	1. Check to see that plugs are in place and there are no loose connections
Data did not transfer to laptop computer	1. Document key information on sample data sheet. Make sure problem is resolved before data may be overwritten.

7.0 REFERENCES & ADDITIONAL READING

1. Chow J. C., Watson J. G., Lowenthal D. H., Solomon, P. A., Maliano K., Ziman S., Richards L. W., PM1- and PM2.5 compositions in California's San Joaquin Valley, Aerosol Sci Technol 18: 105-128 (1993).

2. Fitz D. and Zwicker J. Design and Testing of the SCAQS sampler for the SCAQS study , 1987, prepared under contract #a6-077-32 for the California Air Resources Board, Sacramento, CA, by AeroVironment, Monrovia CA, 1988.

3. Solomon P. A., Fall T., Salmon L. Cass G. R., Gray H. A., Davison A., Chemical characteristics of PM10 aerosols collected in the Los Angeles area JAPCA 39: 154-163 (1989)

4. John, W.: New Personal Samplers for Respirable Particles and PM-2.5. Annual Conference of the American Association for Aerosol Research, Denver, CO,October 13-17, (1997).

5. U.S. Environmental Protection Agency: National Ambient Air Quality Standards for Particulate Matter. Fed. Regist. 62 (138) July 18, 1997.

6. Hering S.V., Roberts P. T., Taylor C. A. (1994) Particle measurements for the Children's Health Study: development of a two-week sampler, presented at the joint conference of the International Society for Environmental Epidemiology and the International Society for Exposure Analysis, September 18-21, 1994, Research Triangle Park, North Carolina.

7. Hering S.V., Taylor C. A. and Anderson K., (1994) Design and implementation of a two-week sampler for fine particle ions and gaseous acids, presented at the Fourth International Aerosol Conference, August 29-September 2, 1994, Los Angeles, California.

8. Lurmann F. W., Roberts P.T., Main H.H., Hering S.V., Avol E.L. and Colome S.D. (1995) Phase II Report Appendix A: Exposure Assessment Methodology, prepared for California Air Resources Board by Sonoma Technology Inc. (Santa Rosa, California) report no. STI-92340-1423-FR.

9. Lurmann F. and Reiss R. (1998) Analysis of the first three years of $PM_{2.5}$ data collected in the Southern California Children's Health Study, presented at the AWMA International Specialty Conference "$PM_{2.5}$: A Fine Particle Standard", January 28-30, Long Beach CA.

10. Chow J. C. and Watson J. G. Guideline on speciated particulate monitoring, draft report prepared for the Office of Air Quality Planning and Standards MD-14) US Environmental Protection Agency, February 9, 1998.

11. Forrest J., Spandau D. J., Tanner R. L., Newman L., Determination of atmospheric nitrate and nitric acid employing a diffusion denuder with a filter pack Atmos Environ 16: 1473-1485 (1982).

12. Possanzini M., Febo A., Liberti A., New design of a high-performance denuder for the sampling of atmospheric pollutants, Atmos Environ 17: 2605-2610 (1983)

13. Appel B. R., Wall S. M., Haik, M., Kothny E L., Tokiwa Y., Simultaneous nitric acid, particulate nitrate and acidity measurements in ambient air, Atmos Environ. 18 (2): 409-416 (1984)

14. Ferm M. , A Na2CO3 coated denuder and filter for determination of gaseous HNO3 an particulate NO3- in the atmosphere. Atmos Environ, 30: 1193-1201 (1986)

15. Allegrini I., DeSantis F., DiPallo V., Febo A., Perrino C., Possanzini M., Liberti A., Annular denuder method for sampling reactive gases and aerosols in the atmosphere, Sci Total Environ 67: 1 (1987)

16. Ferm M. Areskog, H., Hanssen J. E., Hilbert G., Field intercomparison of measurement techniques for total NH4+ and total NO3- in ambient air, Atmos Environ 22: 2275-2281 (1988)

17. Koutrakis P., Wolfson J. M., Slater J. L., Brauer M., Spengler J. D., Evaluation of an annular denuder filter pack system to collect acidic aerosols and gases, Environ Sci Technol 22: 1463-1468 (1988)

18. Brauer M., Koutrakis P., Wolfson J. M., Spengler J. D., Evaluation of the gas collection of an annular denuder system under simulated atmospheric conditions, Atmos Environ 23: 1981-1986 (1989).

19. Solomon P. A., Larson S. M., Fall T., Cass G. R., Basinwide nitric acid and related species concentrations observed during the Claremont nitrogen species comparison study, Atmos Environ 22 1587-1594 (1988)

20. McDow S. R., Huntzicker J. J. Vapor adsorption artifact in the sampling of organic aerosol: face velocity effects, Atmos Environ 24A: 2563-2572 (1990)

21. Turpin B. J., Huntzicker J. J. and Hering S. V., Investigation of organic aerosol sampling artifact in the Los Angeles Basin Atmos Environ 28: 3061-3071 (1994)

22. Eatough D. J., Wadsworth A., Eatough D. A., Crawford J. Wl, Hansen L. D., Lewis E. A., A multiple system, multi-channel diffusion denuder sampler for the determination of fine particulate organic material in the atmosphere, Atmos Environ 27A, 12113-1219 (1993).

23. Kreiger M. S., Hites R. A., Diffusion denuder for the collection of semi-volatile organic compounds Environ Sci Technol 10: 187-189 (1992)

24. EPA Quality Assurance Guidance Document, Final Draft Quality Assurance Project Plan: PM 2.5 Speciation Trends Network EPA-454/D-01-001 June 2000

Appendix A

Consumables, Spare Parts, and Maintenance Items.

Description		Met One Part Number
Accessory and Replacement Parts:		
Sharp Cutoff Cyclone, 2.5 Micron, Complete		8670
Filter Canister, includes filter holders, less SCC		8370
47 mm Filter Holder		460142
SCC Intake Tube to Flow Unit Adaptor		8959
Ambient Temperature Probe (Sensor)		064-1
Temperature. Solar Radiation Shield w/mount		5980
Consumables:		
47mm 2 micron Pore Size Teflon Filters	(50/pkg)	460137
47mm Glass Fiber Filters	(100/pkg)	460138
47mm Quartz Fiber Filters	(50/pkg)	460139
47mm 1 micron Pore Size Nylon Filters	(100/pkg)	460141
Coated, MgO Denuder with Mounting Ring		8382
Maintenance:		
Pump Service Kit (2 Required) Select Pump Series		
Pump Series 2628		680850
Pump Series 2639		680851
Pump Series 2688		680855
Pump Series 2669		680856
Canister O-Ring Kit		8657
Sharp Cutoff Cyclone O-Ring Kit		8658
Replaceable Spare Parts:		
Muffler, pump by-pass		580293
Muffler, main exhaust		580297
Flow Sensor Unit		8424
AC/DC Power Supply		510645
In-Line Filter Unit (4 per Unit)		580299
Female Quick Connection (Pump Box)		580012
Female Quick Connection SuperSASS (Pump Box)		580010
Male Quick Connection (Tubing End)		580011
¼" OD Black Polyethylene Tubing		960020
3/8" OD Black Tubing		960205
3/8" OD Clear Tygon Tubing		960200
Pump Unit		680832
Flow Control Module		9053
Line Select Solenoid Valve		8893
Pump By-Pass Solenoid		8894
SCC Grit Cap		8664
Fan, Pump Box		590052
15 Amp AC Fuse		590816

Appendix B
Typical Transfer of Custody Form

Q10013M TRAINING DB FOR TRAINING USE ONLY

PM 2.5 STN CUSTODY AND FIELD DATA FORM

c. White (return to lab)
c. Yellow (site retains)
c. Pink (lab)

A. CUSTODY RECORD (Name, Date) **Bin ID:** B1043Y

1. Laboratory, Out Jim O'Rourke 11/1/99
2. Site, In _____
3. Site, Out _____
4. Lab, In _____

B. SITE AND SAMPLER INFORMATION

1. Site AIRS Code 199901
2. Sampler S/N 100-3
3. Sampler Type SASS
4. Sampler POC 3
5. Site Name EPA/RTP-SASS
6. Intended date of use Thursday, November 04, 1999
7. Date of Sampler set-up _____
8. Operator's name _____

C. SAMPLER CHANNEL COMPONENT

Channel No.	Component ID No.	Component Description
1	Kept at Site	SASS cyclone
1	I1006S	SASS cassette (Teflon filter) (GREEN)
2	Kept at Site	SASS cyclone
2	I1007T	SASS cassette (MgO denuder nylon filter) (RED)
3	Kept at Site	SASS cyclone
3	I1008U	SASS cassette (quartz filter) (ORANGE)

D. START, END, AND RETRIEVAL TIMES

Channel No.	Start date	Start time	End date	End time	Retrieval date	Retrieval time
1						
2						
3						

E. SAMPLER CHANNEL INFORMATION (Post-Sampling)

Channel No.	Run Time	Run Time, Flag	Sample Volume (m3)	Avg. flow (L/min)	Avg. flow CV (L/min)	Avg. ambient T (° C)	Max. ambient T (° C)	Min. ambient T (° C)
1								
2								
3								

Channel No.	Δ T Flag	Avg. Filter T (° C)	Max. Filter T (° C)	Min. Filter T (° C)	Avg. BP (mm Hg)	Max. BP (mm Hg)	Min. BP (mm Hg)
1							
2							
3							

F. Comments _____

Appendix C
Denuder Maintenance

Coated Denuder

Coating:
Met One Instruments recommends to SASS users that the MgO coated aluminum multicell material and coated be provided by Met One. The multicell aluminum material is a sole source manufacturing company and when received in a bulk form it must be cleaned and made ready to coat.

Customers who wish to do their own coating can contact Met One for cut and cleaned multicell material which is pushed into the Denuder sleeve aluminum ring for use in the sampling canister.

Operational life expectancy of the MgO coated aluminum Denuder is six months in an urban airshed like Los Angeles. Re-coating of the material is not practical and therefore not recommended.

The Met One MgO Coating Procedure Follows, however users should consult the factory for improved or updated process.

Note: Laboratory Safety and Personal Protection Procedures Shall be applied.
Use of gloves and a respirator is required.

1. The aluminum multicell material is washed in an ultrasonic bath under an explosive proof fume hood for five minutes using Methanol.
2. Air dry to complete dryness. Use of filtered laboratory air is necessary for quick drying.
3. Pour approximately 150ml of CH3OH into a clean glass beaker
4. Place a #150 mesh Stainless Steel screen over the top opening of the beaker.
5. Using gloves, place MgO power reagent on top of the screen and using a clean spatula press the MgO through the screen into the CH3OH.
6. Mix thoroughly
7. Using gloves, hand dip the multicell material into the slurry by dipping both one side and then the other to thoroughly coat the internal surfaces of the hexagonal cells.
8. Using filtered laboratory air in a hood, rotate the coated multicell material and blow-filtered air over the surface until the MgO starts to dry to the touch. Approximately 1 minute is necessary before it can be set down.
9. Set coated denuder in clean area and let dry 24 hours before packaging or use.

Operations And Maintenance Manual
Utility Trench Dewatering Treatment System
West Burma Road and Maritime Street
Oakland, CA

7/7/2014

OPERATIONS AND MAINTENANCE MANUAL UTILITY TRENCH DEWATERING TREATMENT SYSTEM

West Burma Road and Maritime Street, Oakland, CA

7/7/2014

Owner

CCIG
300 Frank Ogawa Plaza, Suite 370
Oakland, California 94612

Client

Turner/TOPGRADE Construction/ Flatiron
Joint Venture
300 Frank Ogawa Plaza, Suite 370
Oakland, CA

Consultant

WSP Services, Inc.
2025 Gateway Place, Suite 435
San Jose, CA 95110
Phone: 408-453-6100
Fax: 408-453-0496
www.wspenvironmental.com/usa

WSP Contacts

Robert Roat
Robert.roat@wspgroup.com

Hilary Nevis
Hilary.nevis@wspgroup.com

Table of Contents

1 Introduction 1
1.1 Site Location 1
1.2 Background 1
1.3 Site Area and Description 1
1.4 RMP 2
1.5 Groundwater Management Plan 2
1.5.1 Onsite reuse 2
1.5.2 Discharge to the Storm Drain under an NPDES General Permit 3
1.5.3 Discharge to East Bay Municipal Utility District without treatment 3
1.5.4 Discharge to EBMUD sanitary sewer after treatment 3
1.5.5 Offsite disposal. 3
1.6 Discharge Pathway 4
2 Treatment System Design 5
2.1 Design Concentrations 5
2.2 Design Flow Rate 5
2.3 Process Flow 5
2.3.1 Water Collection 6
2.3.2 Sediment Removal System (Mountain Cascade) 6
2.3.3 Contingency ATS System for Dewatering System 7
2.3.4 Organoclay GAC System 8
2.4 Collection System Components 9
2.4.1 Dewatering Sumps 9
2.4.2 Sump Pumps 9
2.4.3 Collection System 9
2.5 Standard Treatment System Components 10
2.5.1 Baffled Settling Tanks 10
2.5.2 Sand Filter and Carbon Adsorption Batch Tanks 10
2.5.3 Sand Filtration 10
2.5.4 Sand Filter Backwash Tank 11
2.5.5 Organoclay and Granular Activated Carbon 11
2.5.6 Organoclay Vessel 11
2.5.7 Carbon Vessels 11
2.5.8 Water Reuse System 12
2.6 Contingency ATS System (to be installed but only used as needed) 12
2.6.1 Storage/Settling Tanks 12
2.6.2 Chemical Coagulants 12
2.6.3 Process Pumps 12
2.6.4 Additional Contingency ATS System Controls 12
2.7 System Power 12
2.8 System Controls 12
2.9 Discharge 13
2.10 System Redundancy 13
2.1 Startup and Operation Instructions 13
2.1.1 Responsibilities 13
2.1.2 Initial Startup 13
2.1.3 Sand Filter Initial Backwashing 14
2.2 Worker Health and Safety 14
3 Inspections 15
3.1 Screening for Potentially Impacted Materials 15
3.2 Daily Inspections 15
3.3 Weekly Inspections 15
3.4 Monthly Inspections 16
4 Monitoring and Reporting 17
4.1 System Monitoring 17
4.2 Monitoring required by the Groundwater Management Plan 17
4.2.1 Utility Trench Additional Samples 17
4.3 Reporting 18
5 Maintenance 19
5.1 General System Maintenance 19
5.2 Equipment-Specific Maintenance 19

5.2.1 Dewatering Sumps 19
5.2.2 Process Pumps 19
5.2.3 Collection System 19
5.2.4 Settling Tanks 19
5.2.5 Flow Meters 19
5.2.6 System Controls 19
5.2.7 Granular Activated Carbon Adsorption System 20
5.2.8 Generator 20
5.2.9 ATS System 20
5.3 Obtaining Backup Equipment 20

List of Figures

Figure 1 Utility Trench Site Map
Figure 2a Utility Trench Treatment System Process Flow Diagram – 500 gpm

List of Tables

Table 1 Proposed Sampling Schedule

List of Appendices

Appendix A Equipment Maintenance Manuals
Appendix B Health and Safety Plan
Appendix C Inspection Logs
Appendix D Coagulant MSDS
Appendix E NOI Table B-6 - Summary of Groundwater Analytical Results
Appendix F Autodialer Contact List
Appendix G ATS Plan

Signature

This Operations and Maintenance Manual has been prepared under the supervision of a Civil Engineer registered in the State of California.

Robert E. Roat, P.E.

California Professional Engineer C 53593

7/7/2014

Date

1 Introduction

This Operations and Maintenance Manual (O&M Manual) has been prepared by WSP Services, Inc. to comply with the GENERAL WASTE DISCHARGE REQUIREMENTS FOR Discharge or Reuse of Extracted and Treated Groundwater Resulting from the Cleanup of Groundwater Polluted by Volatile Organic Compounds (VOC), Fuel Leaks and Other Related Wastes (San Francisco Bay Regional Water Quality Control Board Order NO. R2-2012-0012, NPDES Permit No. CAG912002 (VOC and Fuel General Permit), herein referred to as the NPDES VOC Permit).

The O&M Manual has been prepared on behalf of Turner/TOPGRADE Construction/Flatiron Joint Venture of Oakland, CA, the General Contractor, for Prologis CCIG Oakland Global, LLC, the Owner.

The dewatering equipment vendor will provide, maintain and inspect treatment system equipment. WSP Services, Inc. of San Jose, California will provide sampling, quarterly reporting and engineering oversight.

The O&M Manual has been prepared to comply with the requirements of the Notice of Intent to Receive Authorization to Discharge Treated Groundwater under the Requirements of the NPDES VOC Permit.

1.1 Site Location

The site is located west of Maritime Street and south of Burma Road between 11th Street and 17th Street in Oakland, CA. The site is adjacent to the San Francisco Bay. The site and treatment system locations are shown in Figure 1.

1.2 Background

The subject property is a portion of the former Oakland Army Base. The army base closed in 1993. In 2003-2006 ownership of the land was transferred to the City of Oakland and the Port of Oakland. The City of Oakland has authorized redevelopment of approximately 228 acres of land and the Port of Oakland is redeveloping 185 acres of land area and 56 acres of submerged land for port-related facilities including storage and intermodal transport. As part of the construction on a portion of the site, soil will be imported and stockpiled to surcharge unstable fill and bay mud, consolidating the unstable areas to establish acceptable geotechnical conditions for building construction.

The contractor is installing various below-ground utilities as part of the development project. Those utilities will include water lines, storm drains, sanitary sewers, electrical lines, telephone lines, and natural gas lines. Some of the utility trenches will be installed to depths below existing groundwater elevations. To assist with the installation of the utilities, a temporary dewatering system will be installed in the vicinity of active sections of trenching. The dewatering system will consist of well points and sumps to temporarily remove water from the trenches. The water will be pumped through temporary header pipes to the utility trench dewatering treatment system.

1.3 Site Area and Description

The site is surrounded by Port of Oakland facilities, freeways and rail lines. It is bordered to the west by the Oakland Outer Harbor, to the east by the railroad lines and Interstate 880, and to the northeast by Interstate 80, and to the south by port facilities.

The site is currently occupied by port structures with paved parking lots, roads and vacant land. Excavation is scheduled to begin in March 2014.

Results of the investigations revealed several zones within ten feet of the utility trench with concentration of VOCs and petroleum hydrocarbons in shallow groundwater. Available data was summarized for the entire site in the Groundwater Management Plan (GMP - Northgate 2013), and is summarized by utility trench zones in Appendix A. The zones are defined in Appendix A. All water from the different zones within the utility trenches will be transported through a header pipe and collected in water collection tanks at the treatment system. It will then be treated to reduce sediment, turbidity, VOCs and petroleum hydrocarbons, and will then be discharged to an existing 48-inch storm drain. Although the GMP only requires testing of water followed by treatment as needed, it has been decided to treat all water generated to avoid construction delays associated with water sampling and analysis. Based on the use of the site as an Army base and the occasional presence of VOCs and hydrocarbons across the site, all of the water within the utility trench area will be treated and discharged under the VOC and Fuels General Permit.

1.4 RMP

The RMP (EKI, 2002a) outlines the basic requirements for managing groundwater at the Site. Section 1.2 of the RMP states that the RMP is intended to allow planned redevelopment in a manner that provides short-term and long-term protection of human health and the environment while minimizing construction delays. Section 6.1.2 of the RMP discusses the requirements associated with removal of chemically-impacted groundwater from a dewatering system. The Contractor is required to comply with, and all activities proposed in this Plan are consistent with, the requirements in the RMP and subsequent letters modifying the RMP (DTSC; 2004, 2009a, 2009b, 2009c, and 2013).

1.5 Groundwater Management Plan

The Groundwater Management Plan (GMP - Northgate 2014) was prepared for Prologis CCIG Oakland Global LLC and submitted to the California Department of Toxic Substances Control (DTSC). In the GMP, five alternatives for the disposition of groundwater generated by the OAB project are contemplated:

1. Reuse for dust suppression
2. Discharge to the storm drain under an NPDES General Permit
3. Discharge to East Bay Municipal Utility District without treatment
4. Discharge to EBMUD sanitary sewer after treatment
5. Offsite disposal.

The work covered by this O&M manual covers discharge to the storm drain and reuse for dust suppression (after NPDES treatment).

1.5.1 Onsite reuse

Onsite reuse will be limited to dust suppression during construction; all other reuse would remain prohibited. Reuse must be approved by the City and the DTSC.

Acceptance criteria for reuse would adhere to a hierarchy of: (1) NPDES Maximum Daily Effluent Limitations, (2) NPDES Trigger Levels, and (3) Marine Surface Water Environmental Screening Levels (ESLs). Maximum Daily Effluent Limits and Trigger Levels are derived from the *General Waste Discharge Requirements for Discharge or Reuse of Extracted and Treated Groundwater* (the VOC and Fuel General Permit; Water Board, 2012).

Water for onsite reuse will be harvested from the effluent of the NPDES treatment system after the effluent sampling point. Reuse water volume will be monitored with a separate flow totalizer.

The NPDES permit requires the following for water reuse:

a. Water for beneficial reuse shall meet the requirements in Section IV.A - Effluent Limitations.

b. Water reuse activities shall be described in the Discharger's NOI, including the method of any additional treatment and the location and type of water reuse.

c. The reuse of treated groundwater shall not impair the quality of waters of the State, nor shall it create a nuisance as defined by CWC section 13050(m).

d. Adequate measures shall be taken to minimize public contact with the reused groundwater and to prevent the breeding of flies, mosquitoes, and other vectors of public health significance during or after the process of reuse.

e. Appropriate public warnings must be posted to advise the public that the water is not suitable for drinking. Signs must be posted in the area, and all reused water valves and outlets appropriately labeled.

f. There shall be no cross-connection between the potable water supply and piping containing treated groundwater intended for reuse.

g. Water reuse consisting of recharge or reinjection is not authorized under this Order. Any reinjection must be performed in accordance with a cleanup order approved by the Regional Water Board, or another lead oversight agency.

1.5.2 Discharge to the Storm Drain under an NPDES General Permit

Water will be discharged under the VOC and Fuel General Permit.

1.5.3 Discharge to East Bay Municipal Utility District without treatment

It is our understanding that TTGF JV has obtained an EBMUD discharge permit, allowing the Joint Venture contractors to truck water to the EBMUD treatment plant. Water will be trucked to EBMUD as needed, to supplement storm drain discharge as needed. Discharge shall be in accordance with the EBMUD permit.

1.5.4 Discharge to EBMUD sanitary sewer after treatment

It is our understanding that TTGF JV has obtained an EBMUD discharge permit, allowing the Joint Venture contractors to truck water to the EBMUD treatment plant. Water will be trucked to EBMUD as needed, to supplement storm drain discharge as needed. Discharge shall be in accordance with the EBMUD permit.

1.5.5 Offsite disposal.

Offsite disposal is outside the scope of this O&M manual. If groundwater does not meet the acceptance criteria for onsite reuse, storm drain discharge, or sanitary sewer discharge (with or without treatment), then groundwater may be disposed offsite. Offsite disposal would likely be the most costly option and may have a significant environmental impact on the community surrounding the Site due to trucking, as groundwater would be transported

by truck to the receiving facility. This option should be considered as the last resort. Additional chemical testing may also be required by the receiving facility. Appropriate manifesting procedures based on groundwater characterization and profile results would be required.

1.6 Discharge Pathway

Treated groundwater from the dewatering system will be discharged to an existing City storm drain box culvert adjacent to the treatment area. Water discharged to the box culvert will flow approximately 100 feet to San Francisco Bay. The discharge path is shown in Figure 1.

2 Treatment System Design

2.1 Design Concentrations

Based on the previous investigations and the construction operations during dewatering, it is anticipated that treatment will be required to capture separate phase product, remove sediment, reduce turbidity and remove VOCs and TPH. Design concentrations for the entire system and each zone were summarized in Table B-6 of the NOI (included here as Appendix E). Because water will enter the system from the various zones as needed to support construction, the system is being designed for the maximum concentrations of most constituents.

Exceptions to the design for maximum concentrations will include TPH as diesel, which has been observed historically at concentrations which must represent floating product. TPH diesel removal has been designed based on the median concentration in the most impacted zone.

For health and safety reasons, if floating product is observed in a trench, steps will be taken to remove the floating product at the site it is found. To trap any floating product which is not removed at the source, underflow weir tanks will be installed at the treatment system to capture separate phase product. However, to the extent possible, floating product will not be pumped into the collection system, but will be absorbed by oleophilic (oil absorbing) mats at the source.

2.2 Design Flow Rate

At startup, the system is designed to treat up to 500 gpm of flow. This flowrate intentionally exceeds the flow rate estimate of the Groundwater Management Report (Northgate 2013), and is expected to be sufficient to treat flow from the utility trenching operation. However, the system has been designed to be expandable for flows up to 1,000 gpm, to account for changes in construction schedules or in the event additional groundwater is encountered. Design flow from the utility trenches throughout the site has an estimated maximum flow rate of 1,000 gpm. Sumps will be used to pump water from the trenches to the treatment system.

Flow is expected to vary based on construction activities and on location and depth of trenching. The treatment system has been designed modularly to allow for fluctuations in flow throughout dewatering.

2.3 Process Flow

This section includes a description of the treatment system process. The treatment system process for flows up to 500 gpm is diagrammed in Figure 2a. The treatment system process for flows up to 1,000 gpm will be added to the O&M manual if needed.

The system includes extraction using in-trench sumps, removal of floating product at the source (if encountered) with backup underflow weir tanks, conveyance to the treatment system, mechanical sediment removal, contingency sediment removal using coagulant, and treatment for VOCs using granular activated carbon.

The system has been designed to include both mechanical sediment removal methods and a contingency Active Treatment System (ATS system) with chemical coagulant addition. Operation of the system in the ATS system mode requires oversight by a trained operator and sampling by trained sampling personnel, both approved by the Engineer. Operation of the ATS system also requires real- time monitoring of pH and turbidity, and periodic monitoring of coagulant dose and residual by a trained ATS operator. It is intended that the ATS system will be used if turbidity of 50 NTUs (measured prior to carbon absorption) cannot be achieved by mechanical means.

Because the coagulant dosing is followed by both sand filtration and activated carbon, excess residual dosing is extremely unlikely, so the system may be operated overnight in an automated mode if the trained operator can warrant the system reliability.

For operational reasons, the system is divided into four parts: 1) the water collection system; 2) the mechanical sediment removal system (Mountain Cascade section); 3) the ATS contingency system; and 4) the Organoclay/GAC system.

2.3.1 Water Collection

Sump and Conveyance System

Water from utility trench dewatering will be collected in sumps constructed within each trench. The sumps will be installed in the trenches so that the surrounding groundwater gradient is impacted as little as possible. As required by the The sumps will be moved as needed to dewater open trenches ahead of and during utility installation. A maximum of up to ten sumps may be operated at any one time. A sample sump cross-section provided by Mountain Cascade is included in Appendix B.

Trenches within special sampling areas will be isolated with cutoff walls as required by the groundwater management plan, to prevent contaminants from moving down the trench.

If floating product is observed in a trench, attempts will be made to remove it with oleophilic (oil-absorbent) pads. If any separate phase product is pumped with the groundwater, it will be removed by treatment in two 9,000-gallon underflow weir tanks connected inparallel..

Water will be conveyed to the treatment system using inline sumps and pumps as needed to provide sufficient pressure. In line sumps will be equipped with high-high level shutoffs as needed to prevent overflows in the event of a pump or power failure. It is anticipated that the conveyance system, shown in Appendix B, will be installed and used in phases as needed to address trench dewatering requirements. Water may also be trucked to the treatement system inlet from the trench areas if necessary.

2.3.2 Sediment Removal System (Mountain Cascade)

2.3.2.1 **500 gpm System**

Water will enter the Sediment Removal system from the header pipe collection system and pass through a control valve. Water will then enter underflow weir tanks to allow collection of separate phase oil, if present, and then will flow to multiple overflow weir tanks connected in parallel, to allow settling of particulates. Water will be pumped from the outlet of the overflow weir tanks directly through a sand filter. Maintenance and monitoring of the header pipe, underflow and overflow weir tanks, sand filter and pumps will be the responsibility of Mountain Cascade or others designated by the Contractor.

Turbidity at the inlet to the sand filter will be monitored and recorded. Turbidity at the outlet to the sand filter will be monitored and used to notify the contractor of the potential need for ATS treatment and to control the inlet valve if turbidity is above specifications.

The header pipe, sump pumps and process pumps will be designed, maintained and monitored for effectiveness and leaks by Mountain Cascade or others designated by the Contractor. Water from the header pipes will be distributed to eight 9,000-gallon (nominal) weir tanks connected in parallel.

2.3.2.2 **1,000 gpm System**

To increase capacity to 1,000 gpm, Mountain Cascade may add eight additional 9,000-gallon weir tanks in parallel (or more if space allows and need requires). If turbidity requirements can be met with fewer tanks, then fewer tanks may be used.

2.3.3 Contingency ATS System for Dewatering System

The ATS system will be implemented when needed to control the turbidity of groundwater from trenches. High turbidity at the effluent to the Mountain Cascade sand filter could result in either clogging of the organoclay/GAC system or excessive turbidity at the system effluent.

The VOC/fuel NPDES General Permit does not contain an effluent limit for turbidity, but contains a trigger level of 5 NTU. The Construction General NPDES Permit contains a turbidity action level of 250 NTUs, but the ATS portion of the permit contains a numerical effluent limitation of 10 NTUs (Daily flow-weighted Average) and 20 NTU (single sample); however this limitation applies to the treatment of stormwater, not groundwater.

Use of the contingency ATS system is recommended in the following instances:

1) The GAC effluent turbidity exceeds 5 NTUs and a trigger level study shows that the 5 NTU goal cannot be achieved without advanced treatment
2) The GAC effluent turbidity exceeds 50 NTUs for more than one hour, indicating that turbidity is not being controlled by the GAC
3) The Mountain Cascade sand filter effluent turbidity exceeds 50 NTUs for more than 4 hours, which may clog the GAC.
4) The GAC shows signs of clogging, even with Mountain Cascade sand filter effluent turbidity below 50 NTUs, and the TTGF JV representative determines it is more cost effective to operate the ATS system than to frequently replace the GAC.

The Mountain Cascade system will be equipped with turbidity meters at the Mountain Cascade sand filter influent and effluent. An autodialer will be linked to the sand filter effluent turbidity meter and will alert pre-selected contacts of Mountain Cascade, TTGF JV, Clear Creek, and WSP if the following scenarios occur:

- If the sand filter effluent turbidity exceeds 50 NTUs for more than 60 minutes, the autodialer will alert Mountain Cascade and TTGF JV representatives that additional treatment is needed.
  - If the sand filter effluent turbidity remains above 50 NTU for an additional four hours, the autodialer will alert Clear Creek and WSP, the system shut off valve may be closed at the discretion of the contractor, and the ATS system will be brought online.
- If the sand filter effluent turbidity exceeds 100 NTU for more than 60 minutes, the autodialer will call Mountain Cascade, TTGF JV, Clear Creek, and WSP, the system shut off valve will be closed, and the ATS system will be brought online.
- If the effluent of the GAC exceeds 50 NTUs for more than 60 minutes, the influent control valve will be closed and the autdialer activated.

If the ATS system needs to be brought online, the ATS system operator will start up the system within 24 hours, and will operate it for at least one day, or until Mountain Cascade sand filter effluent turbidity decreases below 50 NTUs, whichever is longer. Contact phone numbers are included in Appendix F.

When the ATS system is used, the water will be diverted after the Mountain Cascade sand filter, and a cationic biopolymer coagulant (Flocclear®) will be added in-line to the water to generate floc. The coagulant will be added using metering pumps before the settling tanks. Dosed water will flow to 20,000-gallon settling tanks to allow floc to form and settle, and will then overflow to a separate tank or chamber, from which water will be pumped through the ATS system sand filters and to the remainder of the standard treatment system. A polish dose of coagulant may be added prior to the sand filters to improve dose control and turbidity. ATS system effluent turbidity and pH will be automatically monitored and recorded. Polymer dose will be established and recorded by periodic dose and residual testing. After one full day of operation, the system will be tested in mechanical settling mode with no polymer to verify that the system can go back to non-ATS operation.

The Contingency ATS System may only operate under the direct supervision of a trained ATS operator. The ATS system operation will in general conform with the requirements of Attachment F of the Construction Stormwater General Permit (2009-0009-DWQ). However, the system will be allowed to operate in automatic mode overnight and weekends providing the trained ATS operator checks residual polymer and dose at the end of shift, and provided the pH and turbidity are connected to autodialer notification if either drift out of spec, and provided the trained ATS operator will warrant the automatic operation.

2.3.3.1 **500 gpm System**

The 500 gpm ATS system will consist of four 20,000 gallon settling tanks in parallel and one four-pod sand filter. The Mountain Cascade sand filter may be used in this role or a separate sand filter may be used, at the discretion of the Engineer, the ATS system operator, and the Mountain Cascade operator.

2.3.3.2 **1,000 GPM System**

The 1,000 gpm ATS system will consist of at least eight 20,000 gallon settling tanks in parallel and two four-pod sand filters. The Mountain Cascade sand filters may be used in this role or a separate sand filter may be used, at the discretion of the Engineer, the ATS system operator, and the Mountain Cascade operator.

2.3.4 Organoclay GAC System

When the system is operating in mechanical mode, after the sand filters, water will flow into a Sand Filter Batch Tank so that flow may equalize. From this batch tank, water will be pumped through rows of one organoclay vessel followed by two granular activated carbon vessels, capable of removing total petroleum hydrocarbons and VOCs. Each row will be capable of treating up to 500 gpm of flow.

When the system is operating with the ATS system, the water will pump directly from the sand filter to the carbon and organoclay vessel rows. The ATS operator will be able to monitor flow equalization between the two system components.

After the carbon vessels, water will flow out of the system and be discharged into the existing city storm drain at the location shown in Appendix A. Totalizing flow meters will be located at the influent and effluent of the treatment system. All process pumps will be duplexed for reliability reasons and so that the treatment system components may be easily removed if flow rate significantly decreases over the lifetime of the dewatering operations.

2.3.4.1 **500 gpm System**

After the sand filters, water will be pumped through one 15,000-pound organoclay vessel followed by two 10,000-pound GAC vessels. Water must be pumped through this row at a minimum of 400 gpm so that channeling within the vessels does not occur.

2.3.4.2 **1,000 GPM System**

To increase capacity to 1,000 gpm, a second sand filter may be used in parallel. After the sand filters, water will be pumped through two rows of one 15,000-pound organoclay vessel followed by two two10,000-pound GAC vessels (2 organoclay and 4 GAC total)Water must be pumped through each row at a minimum of 400 gpm so that channeling within the vessels does not occur.

2.4 Collection System Components

Collection system components will be supplied and maintained by Mountain Cascade. Design criteria for the process components are included below. All components will be installed as specified or with equivalent equipment approved by the design engineer). Operation and maintenance manuals for the proposed process components are included in Appendix A.

2.4.1 Dewatering Sumps

Dewatering sumps will be provided by Mountain Cascade, and will be moved with the trenches. The Engineer will review the sump installation and operation to verify that individual sumps are not producing excessive turbidity. A cross section of the sumps' design can be found in Appendix B.

2.4.2 Sump Pumps

Trench groundwater pumps will be Mody or Flygt brand electrical submersible sump pumps with internal shutoff, or engineer-approved equivalent.

2.4.3 Collection System

Groundwater will be pumped through a collection system consisting of HDPE pipe, flexible pump hose, schedule 40 PVC or approved equivalent. Pipe size will depend on the number of pumps and distance to the treatment system, to be determined by the contractor.. It is anticipated that booster pumps will be required to transfer the water from the utility trench areas to the treatment system, and these will be installed as needed by the contractor. The contractor will be responsible for the selection of pipe size and booster pumps to account for head losses and lift requirements.

2.5 Standard Treatment System Components

2.5.1 Baffled Settling Tanks

2.5.1.1 **500 gpm System**

The baffled settling tanks will consist of a minimum of 8 rows of 9,000-gallon (nominal) portable open-access tanks with an overflow weir in the middle of the tanks, connected in parallel. The water will be pumped from the influent point into these tanks, and from the second compartment of these tanks to the remainder of the treatment system. The purpose of these tanks is to remove sediment and to allow equalization and mixing of the influent water.

2.5.1.2 **1,000 gpm System**

The baffled settling tanks will consist of up to 16 rows of 9,000-gallon (nominal) portable open-access tanks with an overflow weir in the middle of the tanks, connected in parallel. Tanks will be added as needed to meet turbidity requirements. The water will be pumped from the influent point into these tanks, and from the second compartment of these tanks to the remainder of the treatment system. The purpose of these tanks is to remove sediment and to allow equalization and mixing of the influent water.

2.5.2 Sand Filter and Carbon Adsorption Batch Tanks

If the ATS system is online, the sand filter batch tank will be located after the ATS storage/settling tanks and no carbon adsorption batch tank will be necessary. If the ATS system is offline, the water will flow into a carbon adsorption batch tank immediately following the sand filter which will equalize flow before being pumped through the carbon organoclay vessels.

2.5.2.1 **500 gpm System**

The system's batch tanks will consist of one 10,000-gallon (nominal) portable open-access tanks without an overflow weir.

2.5.2.2 **1,000 gpm System**

An additional batch tank may be added to improve system stability for flow rates greater than 500gpm. Tanks will be added after discussion between the Operator and Engineer.

2.5.3 Sand Filtration

2.5.3.1 **500 gpm System**

One four-pod sand filtration system (Yardney IL5424- sand filters or approved equivalent) will be used to remove remaining sediment in the Mountain Cascade system and the ATS system. If contractual requirements allow, one sand filtration system can be shared between the two systems. Each sand filter will be capable of treating up to 500 gpm. The sand filter will be automatically backwashed to a separate storage tank to allow settling prior to recycling to the sediment removal tanks.

2.5.3.2 **1,000 gpm System**

For flows between 500 and 1000 gpm, an additional sand filter similar to that specified above may be required for the Mountain Cascade system and the ATS system. If contractual requirements allow, one additional sand filtration system can be shared between the two systems. Each sand filter will be capable of treating up to 500 gpm. The sand filter will be automatically backwashed to a separate storage tank to allow settling prior to recycling to the sediment removal tanks.

2.5.4 Sand Filter Backwash Tank

One 10,000 gallon nominal tank will be used to store backwash from the sand filter(s). The backwash will be given time to settle before it is pumped back into the system at the Mountain Cascade system influent.

2.5.5 Organoclay and Granular Activated Carbon

2.5.5.1 **500 gpm System**

The 500 gpm system has been designed to support one 15,000-pound organoclay vessel followed by two Granular Activated Carbon vessels in parallel, each containing 5,000 pounds of virgin coconut shell liquid phase GAC. Specifications for the vessels, the organoclay, and the GAC are included in Appendix B.

2.5.5.2 **1,000 gpm System**

The number of parallel rows may be expanded or contracted based on the actual flow rate required to maintain dewatering, up to two rows of one organoclay vessel followed by two GAC vessels. Each row of organoclay/carbon vessels will be capable of treating up to 500 gpm.

2.5.6 Organoclay Vessel

The organoclay vessels will be capable of 500 gpm of flow and will contain 50% organoclay mixed with 50% virgin coconut shell liquid phase GAC; the vessels will include approximately 15,000 lbs of this mixture. Based on equipment availability, different sized vessels may be used with engineer approval. Organoclay specifications are included in Appendix A.

2.5.7 Carbon Vessels

The carbon vessels will be capable of 500 gpm of flow and will contain 10,000 pounds of virgin coconut shell liquid phase GAC. Based on equipment availability, different sized vessels may be used with engineer approval. Liquid phase virgin coconut shell granular activated carbon specifications are included in Appendix A.

2.5.8 Water Reuse System

The treatment system effluent will be equipped with automatic valves to allow on-demand filling of an elevated water storage tank. The water storage tank will be provided by others. The tank will be labeled as non-potable water, and will be installed with backflow preventers if City water is also attached to the tank. The tank will draw water from the treatment system on demand.

2.6 Contingency ATS System (to be installed but only used as needed)

2.6.1 Storage/Settling Tanks

The storage/settling tanks will consist of a minimum of four 20,000-gallon (nominal) portable open-access tanks without an overflow weir, connected in parallel. These settling tanks have been sized to allow at least 80 minutes of settling time for 1,000 gpm of flow. Additional settling tanks may be added if the system needs increased residence time to improve effluent turbidity.

2.6.2 Chemical Coagulants

Chemical coagulant Flocclear® will be used during dewatering treatment operations. The coagulant will be injected after the two parallel baffled settling tanks, and a polish dose may be added immediately before the sand filters if needed to control turbidity. The MSDS for Flocclear® is included in Appendix D.

2.6.3 Process Pumps

Transfer pumps will be submersible Flygt N-Pump Series model 3102, capable of operating within the full range of 250-600gpm or engineer approved equivalent. The process pumps shall be duplexed for reliability reasons.

2.6.4 Additional Contingency ATS System Controls

Additional controls will include coagulant dosing feedback loops tied to flowrate. Dose will be adjusted by the Qualified ATS Operator based on jar tests, residual chitosan tests and experience.

2.7 System Power

Power will be supplied by power drops from PGE, with backup generators if needed temporarily.

2.8 System Controls

The system will include high and low level switches to activate and shut off sand filter, GAC, and contingency system transfer pumps based on level in the appropriate tank. System controls will also include a high-high level switch in the sediment removal tanks. The high-high level switch will trigger an alarm monitored by onsite personnel, or trigger an autodialer which will call a list of responders including contractor maintenance managers, the Engineer, and the Contractor foreman. The high/high level switch will also partially close a valve from the well field manifold to reduce flow until the potential overflow situation can be addressed. The method of alarm, and if appropriate, the list of responders and telephone numbers will be established and documented at the time of system startup. The elevation of the high/high alarm will be placed to allow adequate time for response.

System integrity will be monitored and logged visually on a daily basis by onsite personnel during normal work hours. Total system flow will be monitored and logged the onsite personnel at least twice per week. System maintenance will be the responsibility of the dewatering treatment system subcontractor. System sampling and reporting will be the responsibility of WSP.

2.9 Discharge

Treated groundwater from the dewatering system will be discharged to the existing City storm drain inlet located on Figure 1. The discharge path for the storm drain is shown on Figure 1. Water in the storm drain will flow to San Francisco Bay.

2.10 System Redundancy

Backup system components will be available from the equipment vendor on a 24-hour turnaround time. The dewatering system will not be allowed to discharge to the storm drain if the treatment system is not operable.

2.1 Startup and Operation Instructions

2.1.1 Responsibilities

The dewatering wells, pumps and pipe manifold, and treatment system will be installed by a California-licensed driller. The treatment system will be leased from and operated by an experienced water treatment vendor and operator. The system will be inspected daily during work hours by Turner/TOPGRADE Construction/Flatiron Joint Venture of Oakland, CA, the general contractor, and will be inspected weekly and monthly by the water treatment system operator or WSP. Operations and maintenance will be conducted by the driller and water treatment system operator. Flow rate and volume will be recorded daily during normal work hours by Turner/TOPGRADE Construction/Flatiron Joint Venture. Compliance and operations sampling and monitoring for the NPDES permit will be conducted by WSP. System inspection, operation and maintenance will be conducted under the engineering supervision of WSP. WSP will also prepare NPDES compliance monitoring and reporting, including startup reporting, quarterly and annual self-monitoring reports.

2.1.2 Initial Startup

The treatment system will be visually inspected by the Engineer prior to and during startup. Sumps will be brought on line sequentially to reduce total flow and to address anticipated high sediment load at the start of operation. At startup, water will be pumped from the s into the sediment removal tanks, through the sand filters and organoclay/carbon vessels, and then recycled through the system. When the results from the first start up event are received and indicate that all contaminants of concern are below effluent limitations, the system will begin discharging to the storm drain. Treatment system influent and effluent will be sampled and analyzed as shown in Table 1. The system will be re-sampled after five days for the constituents indicated in Table 1. Sampling after startup will occur in accordance with the NPDES permit's monitoring requirements.

The system will be operated 24/7 for the duration of the dewatering project. The duration is estimated at twenty-four months. If at any time the system is turned off for more than 24 hours, the Owner will notify the Regional Board. If the system is off for more than 72 hours, the startup sampling and analyses methodology will be repeated.

2.1.3 Sand Filter Initial Backwashing

The sand filters must be cleaned before operation to purge the system of any fines that remain in the supplied media. The filter must be filled with clean water after media loading, and allowed to soak for 6-12 hours. The filter media should then be backwashed until the effluent is clear, ensuring that the fines have been purged.

2.2 Worker Health and Safety

WSP has prepared a Health and Safety Plan (HASP) for the dewatering system that is intended for use by WSP staff only. It is the contractor's responsibility to provide a HASP for their employees that includes Health and Safety measures for all construction activities and, in particular, for the treatment of water containing VOCs. WSP's HASP is included in Appendix B.

3 Inspections

Inspections will occur on a daily, weekly and monthly frequency. Inspection logsheets are included in Appendix C. Flow totalizer readings will be logged daily on work days, and the change in totalizer readings will be calculated. Daily inspections will be conducted by contractor personnel. Weekly and monthly inspections will be conducted by the equipment maintenance contractor and WSP staff.

3.1 Screening for Potentially Impacted Materials

The Contractor will assign a Designated Observer during all subsurface activities to screen for potential contamination. The Contractor's Designated Observer is responsible for screening and documenting activities by:

- Visually inspecting water that enters an excavation for visible sheens or floating separate phase product;
- Identifying the presence of solvent or hydrocarbon odors; and
- Ensuring that water samples are collected as outlined in the Construction Management Plan.

The activities of the Designated Observer are outside the scope of this O&M manual; however, if water samples are collected or contamination is observed, the treatment system Engineer will be notified by the TTGF JV representative.

3.2 Daily Inspections

Daily inspections will be conducted on normal work days. Daily inspections will be conducted by contractor employees, after training by the equipment vendor and WSP. A sample daily inspection logsheet is included in Appendix C.

Daily inspections will include, at a minimum, logging of flow totalizer readings, calculation of the change in totalizer reading, visual inspection of the dewatering and treatment systems for leaks, generator fuel level (if generator or backup generator are present), and pressure gage readings for the filters. Comments will also be added if other issues are noted. Contractor project management staff, equipment vendor personnel, and WSP personnel will be notified if system issues are observed.

Contractor personnel will provide the daily inspection logsheet to the WSP on a weekly basis.

3.3 Weekly Inspections

Weekly inspections will be conducted by equipment vendor. These inspection will include verification that the daily inspections are being properly conducted, testing of level switches for proper operation, inspection of treatment system pumps for proper operation, inspection of the flow meter for proper operation and inspection of settling tank to determine if solids removal is required. As needed during the weekly inspections, equipment vendor personnel will perform maintenance on the treatment system pumps, sand filter, carbon vessels, and flow meter.

3.4 Monthly Inspections

The monthly inspection by WSP will consist of verification that required weekly and daily inspections are occurring, verification that required maintenance is performed, and verification that required self-monitoring samples have been collected.

4 Monitoring and Reporting

4.1 System Monitoring

The proposed sampling schedule for discharge under the NPDES VOC and Fuel Leak General Permit is included in Table 1, and is based on Table E-2 of the Permit. The sampling schedule for the treatment system is modified to include additional sampling at startup, and additional sampling during pumping from the "additional sampling areas" as defined in the Groundwater Management Plan. Sample results will be QA/QC'd and tabulated as received and provided to the TTGF JV for submittal to the City, Port and DTSC.

4.2 Monitoring required by the Groundwater Management Plan

In accordance with the Groundwater Management Plan (GMP), all initial (three-day start-up) groundwater samples will be analyzed for the following, in addition to the analyses required by the NPDES VOC and Fuel Leak General Permit:

1) VOCs;
2) SVOCs, including polynuclear aromatic hydrocarbons (PAHs);
3) TPH, both extractable and purgeable;
4) Metals (list of metals to be based on effluent discharge requirements);
5) Organochlorine pesticides; and
6) Polychlorinated biphenyls (PCBs).

During sampling events required only by the GMP and not the NPDES permit, only influent samples will be collected. If a constituent is detected in the influent sample, the engineer may require additional effluent sampling at a later date.

Analytical methods are specified in Table 1. All samples will also be visually described and analyzed in the field for pH, temperature, and conductivity. The GMP calls for storing water for three days for sampling and analyses. The NPDES permit requires sampling and analysis on the first day prior to discharge, then sampling after five days of discharge. Because the discharge is governed by the NPDES permit, the sampling and analyses will be accomplished in accordance with the NPDES permit requirements. To comply with the intent of the GMP, additional samples will be collected from the influent, midpoint and effluent of the treatment system on the first, second and third day of discharge; the Influent samples will be analyzed for the six types of compounds listed above, and the midpoint and effluent samples will be analyzed for compounds that are reported in the system influent.

4.2.1 Utility Trench Additional Samples

Trenching and backfilling is anticipated to proceed by approximately 100 lineal feet per day. In most areas, water collection and sampling will proceed as described in Section 4.1.

However, when excavation is occurring through “additional sampling areas” (Appendix D, Figure 6 of GMP), additional influent, midpoint and effluent samples will be collected to document the effectiveness of the treatment system in removing any contaminants encountered. For each excavation in an “additional sampling area,” one round of treatment system influent, midpoint and effluent samples will also be collected on the first day of dewatering in those areas. Influent samples will be analyzed on 24-hour turn-around for constituents anticipated in those areas as described in the GMP. Midpoint and Effluent samples will be analyzed for those constituent reported in the Influent samples. Water will continue to be treated and reused and/or discharged during the analysis of these samples.

If water entering an excavation displays evidence of potential contamination based on the Designated Observer’s observations, additional samples will also be collected as described above.

4.3 Reporting

WSP will prepare quarterly monitoring reports based on the requirements outlined in the VOC NPDES Permit. These reports will be reviewed by the client, and a cover page certifying the accuracy (to the best of their knowledge) will be signed and attached to the report. Quarterly reports will be submitted to the Water Board within the 45 days of the last day of the quarter.

5 Maintenance

5.1 General System Maintenance

Visually inspect entire dewatering system and treatment system for leaks. Document and repair any leaks observed. Also, visually inspect that adequate dewatering is occurring. Notify contractor Site Superintendent and equipment vendor of leaks and insufficient dewatering. Leaks or overflows must be reported to the contractor Site Superintendent, equipment vendor, and to WSP immediately, so that a determination can be made whether the leak or overflow must be reported to the Regional Water Quality Control Board.

5.2 Equipment-Specific Maintenance

Specific maintenance information for pumps, generator and level switches are included in Appendix A. Document leaks, repairs and planned maintenance on daily or weekly logsheets.

5.2.1 Dewatering Sumps

Dewatering sumps will be inspected by the Designated Observer.

5.2.2 Process Pumps

Inspect pumps weekly to determine that they are operating. Remove and maintain pumps in accordance with manufacturers specs (Appendix A).

5.2.3 Collection System

Conduct daily inspections for leaks and damage from construction activities. The collection system will be repaired and protected as needed. All leaks and repairs will be documented on log sheets.

5.2.4 Settling Tanks

Inspect tanks for leaks or overflow conditions daily. Measure depth of sediment on a weekly basis, and remove sediment if more than 1/3 of tank is filled.

5.2.5 Flow Meters

Maintain as indicated in manufacturers specifications (Appendix A). Meters must be supplied with a calibration curve or must be calibrated in the field prior to use. The flow meters must be located on the upstream side of the sediment tanks.

5.2.6 System Controls

Maintain level switches as described in manufacturer specifications (Appendix A).

5.2.7 Granular Activated Carbon Adsorption System

When new carbon is placed in any vessel, the carbon must be soaked in water for at least 24 hours prior to use. Vessels shall be tested for leaks after carbon replacement. Pressure differential across carbon vessels will be monitored to verify proper operation.

5.2.8 Generator

If a backup generator is needed during operation, the provider of the generator should provide any necessary training and the equipment's operation and maintenance manual.

5.2.9 ATS System

All ATS system components will be maintained by the ATS operator on site.

5.3 Obtaining Backup Equipment

Backup equipment will be available from the equipment vendor within 24 hours of notification.

Tables

Table 1
Proposed Sampling Schedule
OAB Redevelopment
Utility Trench NPDES System
Oakland, CA

Type of Sample	Analytical Method	Startup					Contingency	1st Quarter of Operation			2nd Quarter of Operation			3rd Quarter of Operation		
		Day 1 Pre-Discharge (24-hr TAT)	Day 2 Post-Discahrge (24-hr TAT)	Day 3 Post-Discharge (24-hr TAT)	Day 5 (48-hr TAT)	Weekly 4-weeks (48-hr TAT)	When water is drawn from Special Sampling Area	Month 1 (additional)	Month 2	Month 3	Month 4	Month 5	Month 6	Month 7	Month 8	Month 9
Flow Rate (gpm and gpd)	Field Measurement	--	--	--	--	--	--	--	--	--	--	--	--	--	--	--
Bioassay 96 hour static renewal rainbow trout survival	EPA-821-R-02-012	--	--	--	--	--	--	--	--	EFF	--	--	EFF	--	--	EFF
Volatile Organic Compounds (including MTBE, Fuel Ox and TPHg) (Note 3)	EPA Method 8260B	INF	INF	INF	INF	INF	INF	--	INF	INF	INF	INF	INF	INF	INF	INF
		MID	--	--	MID	MID	--	--	MID	MID	MID	MID	MID	MID	MID	MID
		EFF	--	--	EFF	EFF	--	--	EFF	EFF	EFF	EFF	EFF	EFF	EFF	EFF
1,4-Dioxane (Note 3)	EPA Method 8270C	--	--	--	EFF	--	--	--	--	--	--	--	EFF	--	--	--
Semi-VOCs w/out PAHs (Note 1,3)	EPA Method 8270C	INF	INF	INF	INF	--	INF	--	--	--	--	--	INF	--	--	INF
	EPA Method 8270C	EFF	--	--	EFF	--	--	--	EFF	EFF	EFF	EFF	EFF	EFF	EFF	EFF
Turbidity	Field Measurement	INF	--	--	INF	INF	--	--	INF	INF	INF	INF	INF	INF	INF	INF
		EFF	--	--	EFF	EFF	--	--	EFF	EFF	EFF	EFF	EFF	EFF	EFF	EFF
pH	Field Measurement	INF	--	--	INF	INF	--	--	INF	INF	INF	INF	INF	INF	INF	INF
		EFF	--	--	EFF	EFF	--	--	EFF	EFF	EFF	EFF	EFF	EFF	EFF	EFF
Dissolved Oxygen (mg/l)	Field Measurement	--	--	--	--	--	--	--	--	--	--	--	--	--	--	--
Total Dissolved Solids (mg/l)	Field Measurement	EFF	--	--	EFF	--	--	--	EFF	EFF	EFF	EFF	EFF	EFF	EFF	EFF
Temperature	Field Measurement	EFF	--	--	EFF	--	--	--	EFF	EFF	EFF	EFF	EFF	EFF	EFF	EFF
Electrical Conductivity	Field Measurement	EFF	--	--	EFF	--	--	--	EFF	EFF	EFF	EFF	EFF	EFF	EFF	EFF
Hardness as $CaCO_3$	SM 2340B	--	--	--	--	--	--	--	--	--	--	--	--	--	--	--
Salinity	SM	--	--	--	--	--	--	--	--	--	--	--	--	--	--	--
Ethylene Dibromide (Note 1)	EPA Method 8260B	INF	INF	INF	INF	--	INF	--	--	--	--	--	INF	--	--	INF
		EFF	--	--	EFF	--	--	--	EFF	EFF	EFF	EFF	EFF	EFF	EFF	EFF
		--	--	--	--	--	--	--	--	--	--	--	--	--	--	--
Benzene, Toluene, Ethylbenzene, and/or Total Xylenes (Note 1)	EPA Method 8260B	INF	INF	INF	INF	--	INF	--	--	--	--	--	INF	--	--	INF
		EFF	--	--	EFF	--	--	--	EFF	EFF	EFF	EFF	EFF	EFF	EFF	EFF
		--	--	--	--	--	--	--	--	--	--	--	--	--	--	--

Table 1
Proposed Sampling Schedule
OAB Redevelopment
Utility Trench NPDES System
Oakland, CA

Type of Sample	Analytical Method	Startup					Contingency	1st Quarter of Operation			2nd Quarter of Operation			3rd Quarter of Operation		
		Day 1 Pre-Discharge (24-hr TAT)	Day 2 Post-Discahrge (24-hr TAT)	Day 3 Post-Discharge (24-hr TAT)	Day 5 (48-hr TAT)	Weekly 4-weeks (48-hr TAT)	When water is drawn from Special Sampling Area	Month 1 (additional)	Month 2	Month 3	Month 4	Month 5	Month 6	Month 7	Month 8	Month 9
Methyl Tertiary Butyl Ether (Note 1)	EPA Method 8260B	INF	INF	INF	INF	--	INF	--	--	--	--	--	INF	--	--	INF
		EFF	--	--	EFF	--	--	--	EFF	EFF	EFF	EFF	EFF	EFF	EFF	EFF
		--	--	--	--	--	--	--	--	--	--	--	--	--	--	--
Total Petroleum Hydrocarbons as Gasoline Diesel and Motor Oil with Silica Gel Clean Up (Note 1,3)	EPA Method 8260B/8015B	INF	INF	INF	INF	INF	INF	--	INF	INF	INF	INF	INF	INF	INF	INF
		EFF	--	--	EFF	EFF	--	--	EFF	EFF	EFF	EFF	EFF	EFF	EFF	EFF
		MID	--	--	MID	MID	--	--	MID	MID	MID	MID	MID	MID	MID	MID
PAH (Note 1,3)	EPA Method 8310	INF	INF	INF	INF	--	INF	--	--	--	--	--	INF	--	--	INF
		EFF	--	--	EFF	--	--	--	EFF	EFF	EFF	EFF	EFF	EFF	EFF	EFF
		--	--	--	--	--	--	--	--	--	--	--	--	--	--	--
Fuel Oxygenates (Note 1)	EPA Method 8260B	INF	INF	INF	INF	--	INF	--	--	--	--	--	--	--	--	--
		EFF	--	--	EFF	--	--	--	--	--	--	--	--	--	--	--
Total Chlorine Residual (Note 1)	EPA 330 or SM 4500Cl	--	--	--	--	--	--	--	--	--	--	--	--	--	--	--
		--	--	--	--	--	--	--	--	--	--	--	--	--	--	--
		--	--	--	--	--	--	--	--	--	--	--	--	--	--	--
Metals (Note 2,3)	EPA Method 200.8	INF	INF	INF	INF	--	INF	--	--	--	--	--	--	--	--	--
		EFF	--	--	EFF	--	--	--	--	--	--	--	--	--	--	--
Low Level Mercury (Note 2)	1631E	EFF	--	--	EFF	--	--	--	--	--	--	--	--	--	--	--
Cyanide (Note 2)	SM-4500	EFF	--	--	EFF	--	--	--	--	--	--	--	--	--	--	--
Organochlorine Pesticides (Note 3)	EPA 8081A	INF	INF	INF	INF	--	INF	--	--	--	--	--	--	--	--	--
PCBs (Note 3)	EPA 8082	INF	INF	INF	INF	--	INF	--	--	--	--	--	--	--	--	--

Table 1
Proposed Sampling Schedule
OAB Redevelopment
Utility Trench NPDES System
Oakland, CA

Note 1: if known to be present in the influent

Note 2: Inorganic compounds samples shall be analyzed for total (unfiltered) constituents with the reporting levels not exceeding the following: 0.002 ug/l for Mercury; 0.25 ug/l for Cadmium and Silver; 1 ug/l for Nickel, Thallium, and Zinc; 2.0 ug/l for Arsenic and Selenium; 1 ug/l for Cyanide; and 0.5 ug/l for Antimony, Beryllium, Total Chromium, Copper, and Lead (SIP Appendix 4 Minimum Levels http://www.waterboards.ca.gov/iswp/docs/final.pdf). If the Discharger exceeds the trigger for mercury of 0.025, the Discharger may consider re-sampling and re-analyzing another sample using ultra-clean techniques as described in USEPA methods 1669 and 1631 to eliminate the possibility of artifactual contamination of the sample. For pollutants not listed in Appendix 4 of the SIP, the Discharger shall provide the reason for the higher detection level along with any supporting documentation in the monitoring reports. Water Board staff shall make a compliance determination based on data provided.

Note 3: Analysis required by the groundwater management plan (GMP). During sampling events required only by the GMP and not the NPDES permit, only influent samples will be collected. If a constituent is detected in the influent sample, the engineer may require additional effluent sampling at a later date.

Figures

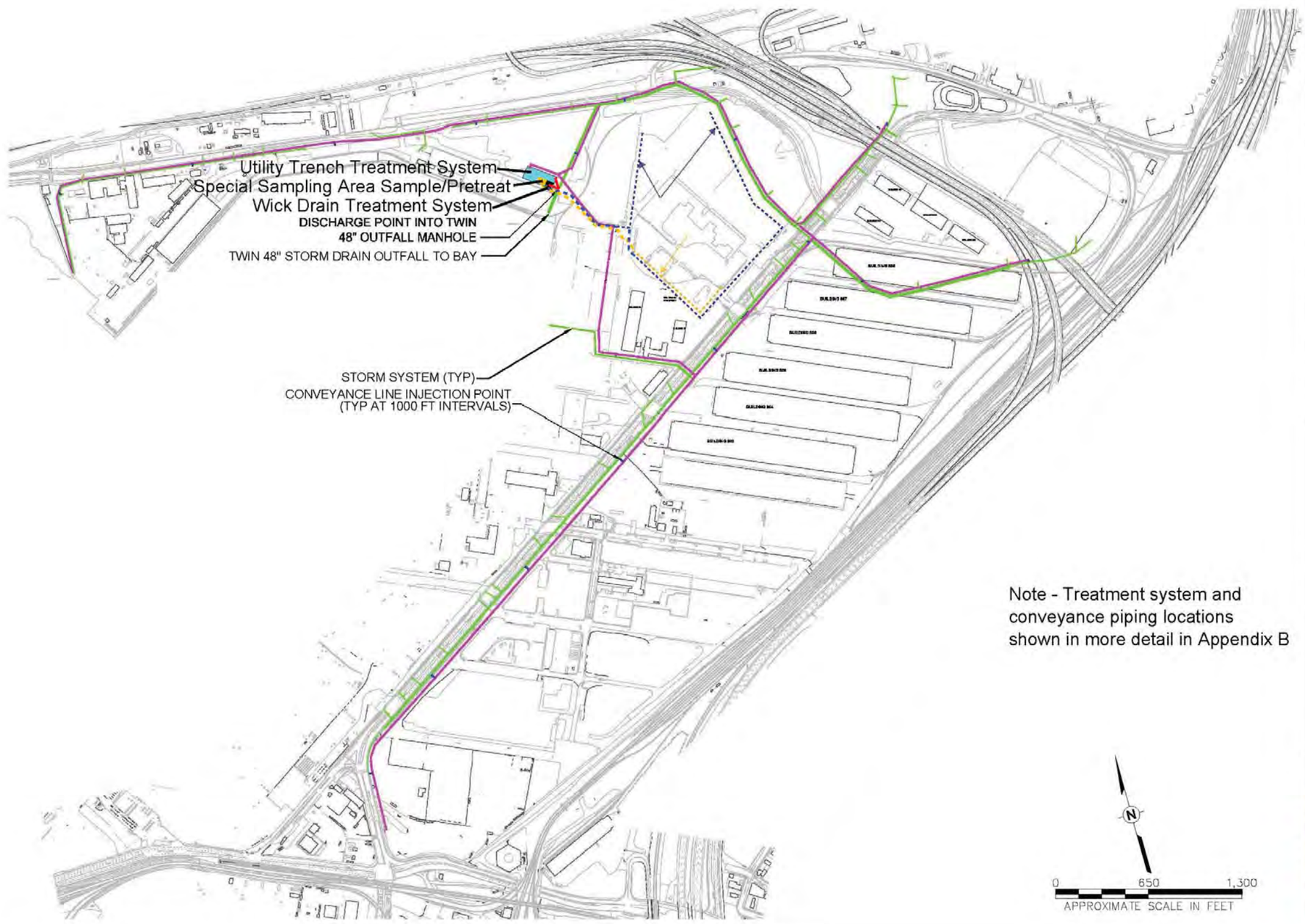

B

R:\Acad\CADD\2014\14M0080-Oakland Army Base\CAD\14M0080-007.dwg 3/19/2014 3:19 PM Uals01166

Drawn By: LS 3/19/2014
Checked: RER 5/20/14
Approved: RER 5/20/14
DWG Name: 14M0080-007

OAKLAND ARMY BASE REDEVELOPMENT PROJECT
CONSTRUCTION DEWATERING TREATMENT PLAN
PREPARED FOR
TURNER/TOPGRADE/FLATIRON JV
OAKLAND, CALIFORNIA

Figure 1

UTILITY TRENCH SITE MAP

WSP
WSP Services, Inc.
2025 Gateway Place, Suite 435
San Jose, California 95110
(408) 453-6100
www.wspgroup.com/usa

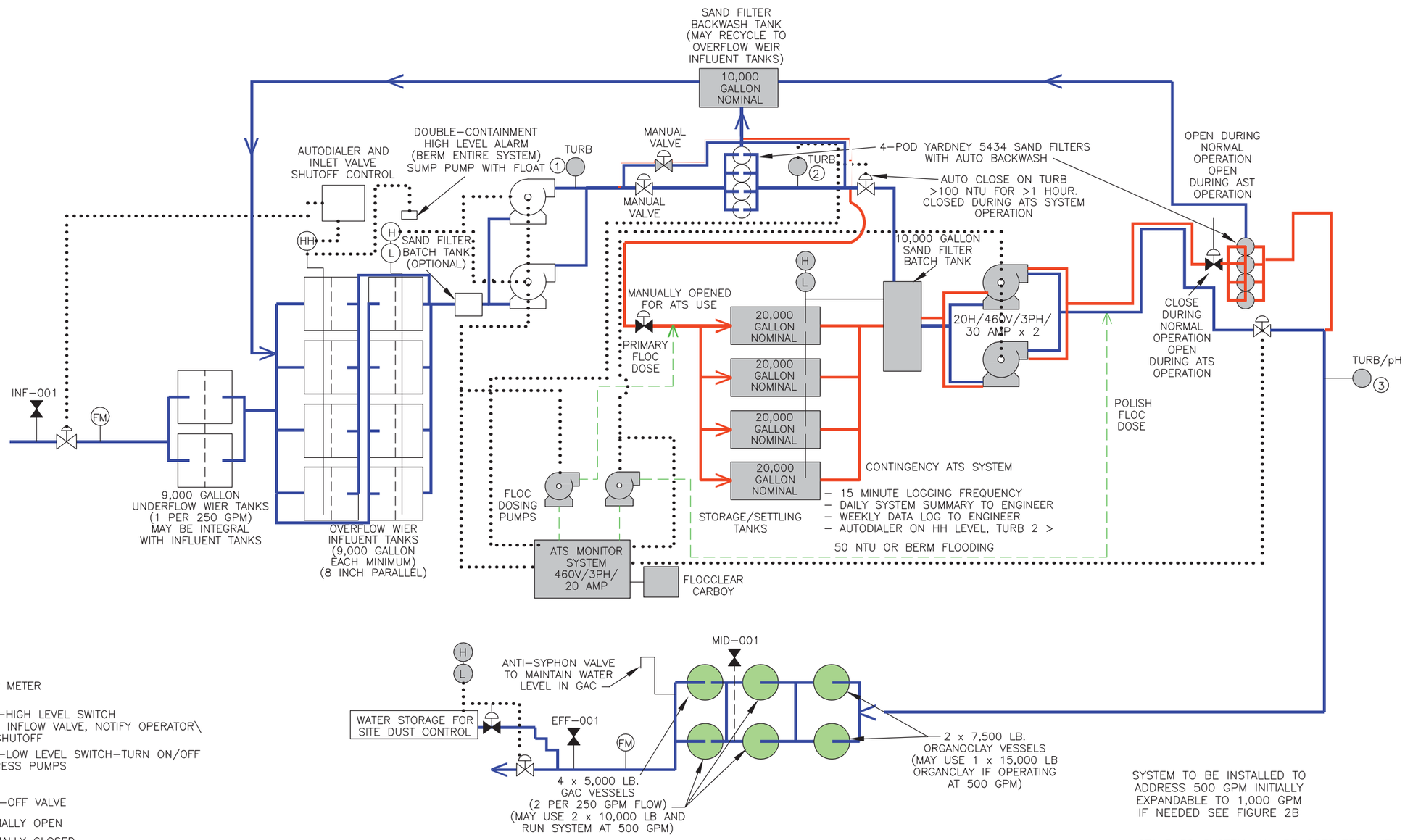

LEGEND

- FM — FLOW METER
- HH — HIGH-HIGH LEVEL SWITCH SHUT INFLOW VALVE, NOTIFY OPERATOR\ ON SHUTOFF
- H/L — HIGH-LOW LEVEL SWITCH-TURN ON/OFF PROCESS PUMPS
- SHUT-OFF VALVE
- NORMALLY OPEN
- NORMALLY CLOSED
- ATS SYSTEM COMPONENT
- PROCESS WATER
- FLOC DOSING
- CONTROL LINES
- ATS PROCESS WATER
- VOC TREATMENT SYSTEM COMPONENT

NOTE:
IF ATS SYSTEM NEEDED, MINIMUM 20,000 GALLON TO HOLD INFLOW AT 200 GPM UP TO 16 HOURS OR OPERATE IN AUTOMATIC MODE WITH ATS OPERATOR APPROVAL.

SYSTEM TO BE INSTALLED TO ADDRESS 500 GPM INITIALLY EXPANDABLE TO 1,000 GPM IF NEEDED SEE FIGURE 2B

STANDARD SYSTEM MAY BE OPERATED AUTOMATICALLY WITHOUT COAGULANT DOSING. WHEN ATS SYSTEM IS USED QUALIFIED OPERATOR MUST BE PRESENT.

REGISTERED PROFESSIONAL ENGINEER ROBERT E. ROSS No. C 53593 Exp. 6/30/15 CIVIL STATE OF CALIFORNIA

B

THE ORIGINAL VERSION OF THIS DRAWING IS IN COLOR. BLACK AND WHITE COPIES MAY NOT ACCURATELY DEPICT CERTAIN INFORMATION.

NOTICE: THIS DRAWING HAS BEEN PREPARED UNDER THE DIRECTION OF A PROFESSIONAL. DO NOT ALTER THIS DOCUMENT IN ANY WAY WITHOUT THE WRITTEN CONSENT OF WSP USA SERVICES, INC.

Drawn By: LS	7/7/2014	
Checked: HN	7/7/2014	
Approved: RER	7/7/2014	
DWG Name: 14M0080-012		

OAKLAND ARMY BASE REDEVELOPMENT PROJECT
CONSTRUCTION DEWATERING TREATMENT PLAN
PREPARED FOR
TURNER/TOPGRADE/FLATIRON JV
OAKLAND, CALIFORNIA

Figure 2A

UTILITY TRENCH TREATMENT SYSTEM
PROCESS FLOW DIAGRAM 500 GPM SETUP

WSP
WSP Services, Inc.
2025 Gateway Place, Suite 435
San Jose, California 95110
(408) 453-6100
www.wspgroup.com/usa

R:\Acad\CADD\2014\1400080-Oakland Army Base\CAD\14M0080-012.dwg 7/8/2014 11:09 AM Usls01166

Appendix A – Equipment Maintenance Manuals

FLYGT

3085
3102
3127

INSTALLATION, CARE AND MAINTENANCE

892062/04

Flygt

ITT Industries

CONTENTS

Data plate interpretation 2
Product description 4
General design of a Flygt pump 5
Installation 6
Electrical connections 7
Cable chart 9
Transportation and storage 10
Operation 11
Care and maintenance 12
Oil change 13
Service log 14

DATA PLATE INTERPRETATION

General data plate

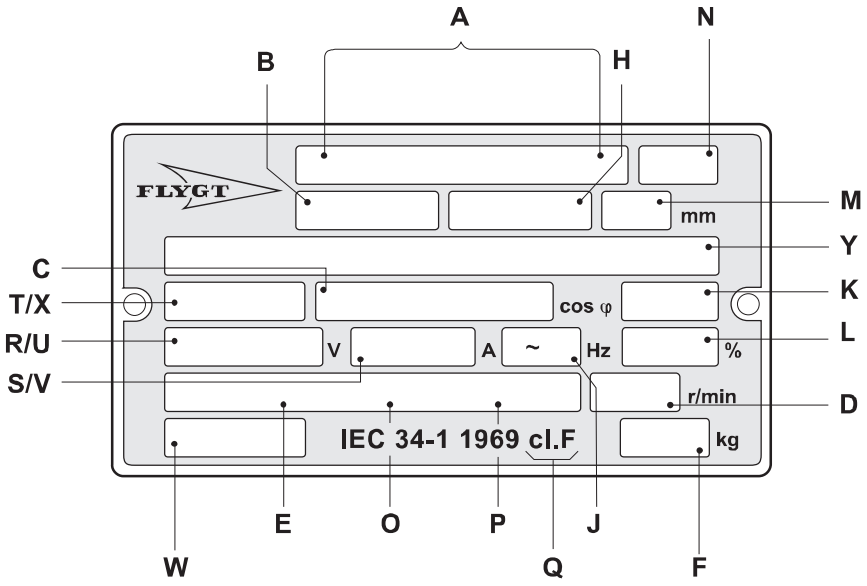

A		Product No.
B		Serial No.
C		Shaft power
D		Rated speed
E	*	Propeller speed
F		Weight
H		Curve code, first digit = Number of poles
J		Number of phases, type of current, frequency
K		Power factor
L		Operating duty, cont./int.
M		Impeller/propeller diam.
N		Factory code
O	*	Gear ratio
P	*	Direction of rotation: L=left, R=right
Q		Temperature class
R/U		Rated voltage
S/V		Rated current
T/X		Stator connection
W		Special order No.
Y		Motor No.

* For mixers

The pictures in this manual may differ somewhat from the delivered pump depending on the hydraulic end configuration.

DATA PLATE INTERPRETATION

Approval plates

These approval plates apply to an explosion-proof submersible Flygt pump. The plates are used together with the general data plate on the pump.

EN: European Norm
EN 50014, EN 50018, EEx dII T4

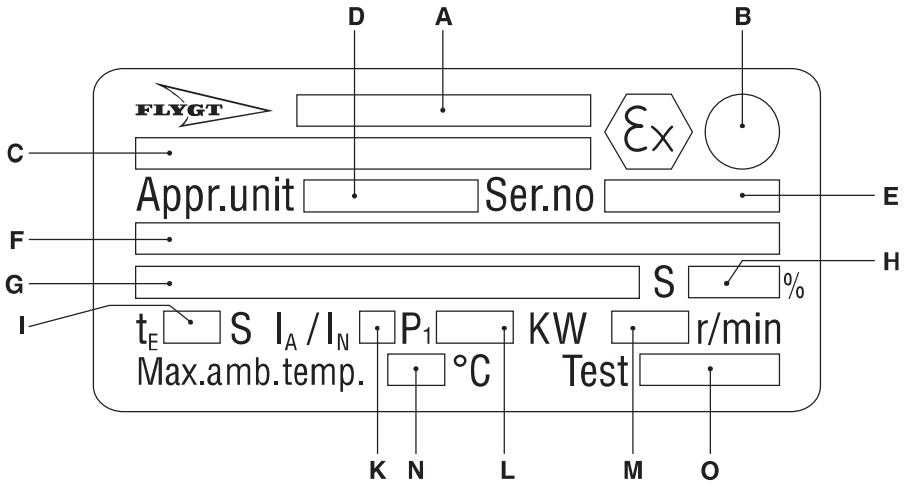

A	Approval	I	Stall time
B	For Class I approval	K	Starting current/Rated current
C	Approval no.	L	Input power
D	Approved drive unit	M	Speed
E	Serial no.	N	Max. ambient temp.
F, G	Additional information	O	Controller
H	Operating duty, cont./int.		

FM: Factory Mutual
Class I Div. I Grp C and D
Class II and III Div. I Grp E, F and G

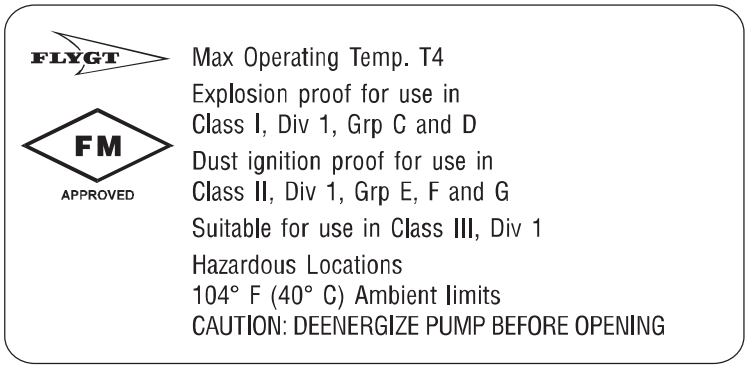

PRODUCT DESCRIPTION

Introduction

Thank you for buying a submersible Flygt pump. In this Installation, Care and Maintenance manual you will find general information on how to install and service the 3085, 3102 or 3127 pump to give it a long and reliable life. In the Parts List you will find all the specific technical data for your pump.

Application

This Installation, Care and Maintenance manual applies to a submersible Flygt pump. If you have bought an Ex-approved pump (please see approval plate on your pump or Parts List) special handling instructions apply as described in this document.

Depending on the hydraulic end, the pump is intended to be used for:

— pumping of waste water

— pumping of light liquid manure and urine

— pumping of sludge

— pumping of ground water

— pumping of sewage if the solids need to be cut into small pieces.

The pumps must not be used in highly corrosive liquids. See pH limits below.

The pump is available for permanent installation in a sump or portable installation with hose connection and stand.

In some applications, the pump is also available for a dry stationary installation on a base stand directly connected to the inlet and outlet lines.

For further information on applications, contact your nearest Flygt representative.

Specific technical data

For specific technical data regarding your pump, please see Parts List.

General technical data

Liquid temperature: max. 40°C (104°F). The pump can be operated at full load only if at least half the stator housing is submerged.

The pump can be equipped for operation at temperatures up to 90°C (195°F). At increased temperatures, the pump must be completely submerged when operated at full load.

Higher temperatures than 40°C (104°F) are not permitted for Ex-approved pumps.

Liquid density: max. 1100 kg/m^3 (9.2 lb per US gal.)

The pH of the pumped liquid: 6—13 (cast iron pumps).

The pH of the pumped liquid: 3—14 (stainless steel pumps).

Depth of immersion: max. 20 m (65 ft).

— In some installations and at certain operating points on the performance curve, the noise level of 70 dB or the noise level specified for the actual pump may be exceeded.

— Only Ex-approved pumps may be used in an explosive or flammable environment.

Warranty claim

Flygt pumps are high quality products with expected reliable operation and long life. However, should the need arise for a warranty claim, please contact your Flygt representative.

GENERAL DESIGN OF A FLYGT PUMP

Design

The pump is a submersible, electric motor-driven product.

1. Impeller

The pump is available with a wide range of impellers for different applications and capacities.

2. Shaft seals

The pump has two mechanical face seals – one inner and one outer, with an intermediate oil housing.

3. Shaft

The shaft is delivered with the rotor as an integral part.

Shaft material: stainless steel.

4. Bearings

The support bearing of the rotor consists of a single-row ball bearing.

The main bearing of the rotor consists of a two-row angular contact ball bearing.

5. Oil housing

The oil lubricates and cools the seals and acts as a buffer between the pump housing and the electric motor.

6. Motor

Squirrel-cage 1-phase or 3-phase induction motor for 50 Hz or 60 Hz.

The motor can be started by direct on-line or star-delta starting.

The motor can be run continuously or intermittently with a maximum of 15 evenly spaced starts per hour.

Flygt motors are tested in accordance with IEC 34-1, 1969.

The stator is insulated in accordance with class F (155°C, 310°F). The motor is designed to deliver its rated output at ± 5% variation from the rated voltage. Without overheating the motor, ± 10% variation from the rated voltage can be accepted provided that the motor does not run continuously at full load. The motor is designed to operate at a voltage imbalance of up to 2% between the phases.

Monitoring equipment

The stator incorporates thermal contacts connected in series.

The pump can be equipped with sensors for sensing water in the oil* and/or stator housing.

*Not applicable to Ex-approved pumps.

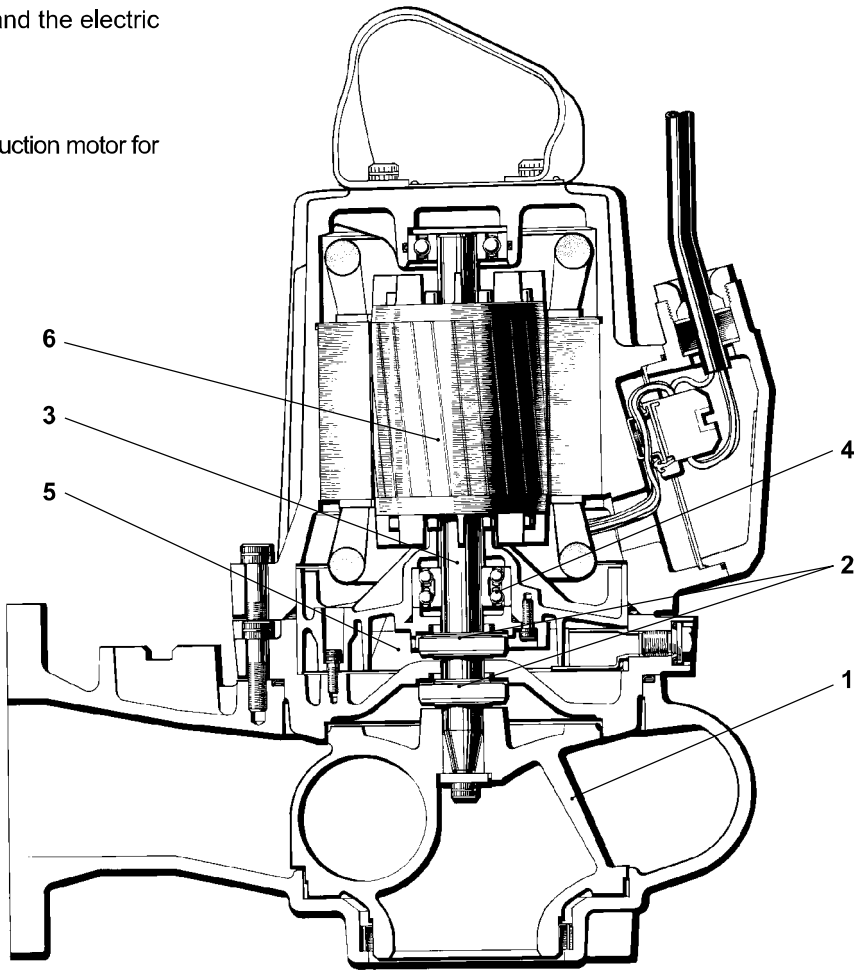

INSTALLATION

Handling equipment

Lifting equipment is required for handling the pump.

- **Stay clear of suspended loads.**
- **Always lift the pump by its lifting handle - never by the motor cable or the hose.**

The minimum height between the lifting hook and the floor shall be sufficient to lift the pump out of the sump.

The lifting equipment shall be able to hoist the pump straight up and down in the sump, preferably without the need for resetting the lifting hook.

Oversize lifting equipment could cause damage if the pump should stick when being lifted.

Make sure that the lifting equipment is securely anchored.

General recommendations

To ensure proper installation, please see the dimensions on the dimensional drawing in the Parts List.

NOTE! The end of the cable must not be submerged. It must be above flood level, as water may penetrate through the cable into the junction box or the motor.

Check that the lifting handle and chain are in good condition.

For automatic operation of the pump (level control), it is recommended that the level regulators be used at low voltage. The data sheet delivered with the regulators gives the permissible voltage. Local rules may specify otherwise.

Clean out all debris from the sump before the pump is lowered down and the station is started.

Special rules apply to installation in explosive atmosphere. Intrinsically safe circuits are normally required (Ex i) for the automatic level control system by level regulators.

Safety precautions

In order to minimize the risk of accidents in connection with the service and installation work, the following rules should be followed:

1. Never work alone. Use a lifting harness, safety line and a respirator as required. Do not ignore the risk of drowning!
2. Make sure there are no poisonous gases within the work area.
3. Check the explosion risk before welding or using electric hand tools.
4. Do not ignore health hazards. Observe strict cleanliness.
5. Bear in mind the risk of electrical accidents.
6. Make sure that the lifting equipment is in good condition.
7. Provide a suitable barrier around the work area, e.g a guard rail.
8. Make sure you have a clear path of retreat!
9. Use safety helmet, safety goggles and protective shoes.
10. All personnel who work with sewage systems must be vaccinated against diseases to which they may be exposed.
11. A first-aid kit must be close at hand.
12. Note that special rules apply to installation in explosive athmosphere.

Follow all other health and safety rules and local codes and ordinances.

ELECTRICAL CONNECTIONS

- **Before starting work on the pump, make sure that the pump and the control panel are isolated from the power supply and cannot be energized.**
- **If the pump is equipped with automatic level control, there is a risk of sudden restart.**
- **All electrical equipment must be earthed. This applies to both pump equipment and any monitoring equipment. Failure to heed this warning may cause a lethal accident. Make sure that the earth lead is correctly connected by testing it.**
- **If persons are likely to come into physical contact with the pump or pumped media (liquid), e.g on construction sites and farms, the earthed (grounded) socket must have an additional earth-(ground-) fault protection device (GFI) connected.**
  When pumping near a lake (jetties, beaches, ponds, fountains etc) a safety-distance of at least 20 m (65 ft) between the person and the pump is applicable.
  The pump must never be placed directly into a swimming pool. If used in connection with swimming pools, special safety regulations apply.

NOTE for Ex version

- **Electrical connections on the explosion-proof motor must be made by authorized personnel.**

  Flygt disclaims all responsibility for work done by untrained, unauthorized personnel.
- **The pump may be used only in accordance with the approved motor data stated on the pump's plates.**
- **Thermal contacts must be connected to protection circuit intended for that purpose according to the approval of the product.**

All electrical work shall be carried out under the supervision of an authorized electrician.

Local codes and regulations shall be complied with.

Check on the data plate which voltage supply is valid for your pump.

Check that the main voltage and frequency agree with the specifications on the pump data plate.

If the pump can be connected to different voltages, the connected voltage is specified by a yellow sticker.

Connect the motor cable to the starter equipment as illustrated in the wiring diagrams.

Conductors that are not in use must be isolated.

The cable should be replaced if the outer sheath is damaged. Contact a Flygt service shop.

Make sure that the cable does not have any sharp bends and is not pinched.

Under no circumstances may the starter equipment be installed in the sump.

NOTE! For safety reasons, the earth conductor should be approx. 50 mm (2.0") longer than the phase conductors. If the motor cable is jerked loose by mistake, the earth conductor should be the last conductor to come loose from its terminal. This applies to both ends of the cable.

Thermal contacts are incorporated in the stator. The thermal contacts can be connected to max 250 V, breaking current max 4 A. Flygt recommends that they be connected to 24 V over separate fuses to protect the other automatic equipment.

Make sure that the pump is correctly earthed (grounded).

When using a variable-frequency-drive (VFD) special rules have to be followed to avoid clogging and overheating. Contact your Flygt representative and ask your VFD-supplier for electrical limitations.

Remember that the starting current in direct on-line starting can be up to six times higher than the rated current. Make sure that the fuses or circuit breakers are of the proper rating.

The Parts List gives rated current. Fuse rating and cable shall be selected in accordance with local rules and regulations. Note that with long cables, the voltage drop in the cable must be taken into consideration, since the motor's rated voltage is the voltage that is measured at the terminal board in the pump.

The overload protection (motor protection breaker) for direct on-line starting shall be set to the motor rated current as given on the data plate.

Check the phase sequence in the mains with the phase sequence indicator.

If intermittent operation is prescribed (see Data Plate), the pump shall be provided with control equipment that provides such operation.

Single phase operation

The Flygt single phase pumps must be equipped with a starter which has start and run capacitors.

A special Flygt designed starter is required for the operation of single phase pumps. The connection of the motor cable to the starter is shown in the wiring diagram.

NOTE! It is not possible to change the direction of rotation of a single phase pump by changing the cable conductors on the starter. Please contact your nearest Flygt representative.

Monitoring equipment

A plate in the junction box shows if the pump is equipped with sensors.

CLS-30 is a leakage sensor for sensing water in the oil housing and initiates an alarm when the oil contains 30% water. Oil change is recommended after the alarm. If the sensor initiates an alarm shortly after the oil is changed, contact your nearest Flygt representative. The CLS sensor is installed in the bearing housing and goes down into the oil housing. The sensor is not applicable to Ex-approved pumps.

CLS sensor body made of glass. Handle with care.

The **FLS** sensor consists of a small float switch for sensing water in the stator housing. Its design makes it suitable for pumps in vertical installations. The FLS sensor is installed in the bottom of the stator housing.

The two sensors, CLS and FLS, can be used in the same pump. They are connected in parallel. Follow the instructions for monitoring equipment.

The **MiniCas II** is a monitoring relay to which CLS and/or FLS are connected.

Check:

— signals and tripping function.

— that relays, lamps, fuses and connections are intact.

Replace defective equipment.

CABLE CHART

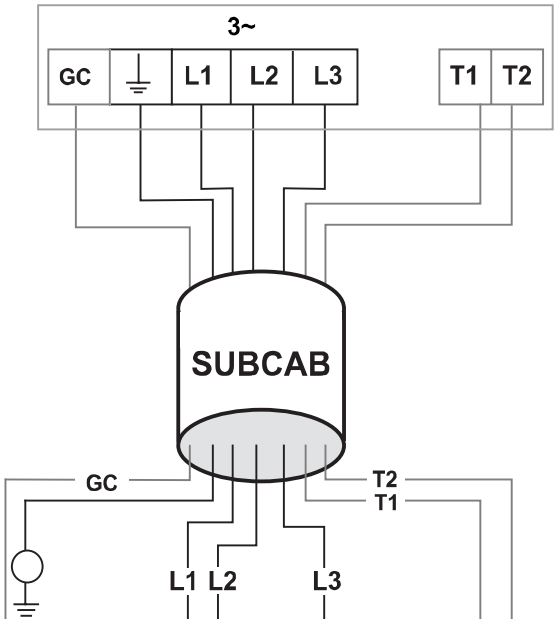

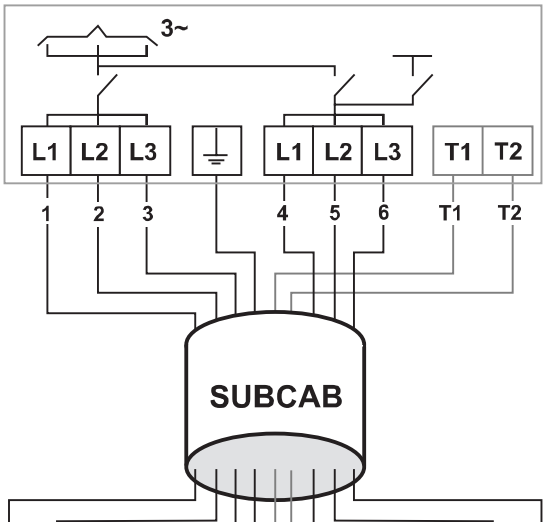

3-phase, direct on-line starting

	Conductors	Connection starter
SUBCAB 4Gx		
	brown	L1
	blue	L2
	black	L3
	yellow/green	earth
SUBCAB 4Gx+2x1.5		
	brown	L1
	blue	L2
	black	L3
	yellow/green	earth
	black	T1*
	black	T2*
For Canada/USA		
SUBCAB xAWG/4		
	red	L1
	white	L2
	black	L3
	yellow/green	earth
SUBCAB xAWG/7		
	red	L1
	white	L2
	black	L3
	yellow	GC**
	yellow/green	earth
	orange	T1*
	blue	T2*

3-phase, star-delta starting

	Conductors	Connection starter
SUBCAB 7Gx		
	black 1	L1
	black 2	L2
	black 3	L3
	black 4	L1
	black 5	L2
	black 6	L3
	yellow/green	earth
SUBCAB 7Gx+2x1.5		
	black 1	L1
	black 2	L2
	black 3	L3
	black 4	L1
	black 5	L2
	black 6	L3
	black T1	T1*
	black T2	T2*
	yellow/green	earth

* Terminal for connection of thermal contacts in the motor and monitoring equipment.

** GC = Ground Check

SUBCAB is a registered trademark of ITT Flygt AB for electrical cables.

CABLE CHART

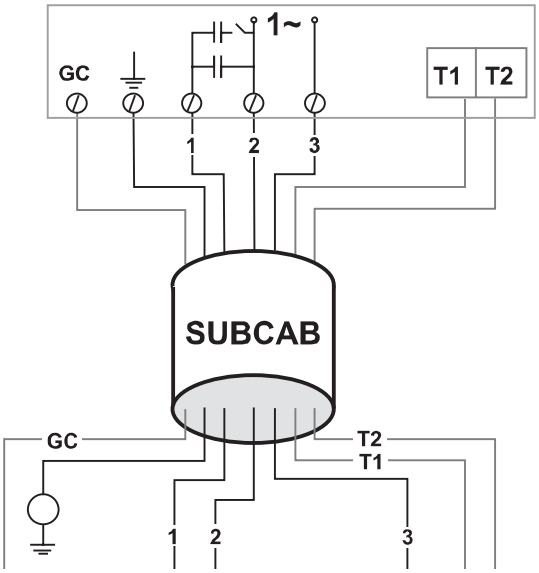

Single phase

SUBCAB 4Gx

Conductors	Connection starter
brown	1
black	2
blue	3
yellow/green	earth

SUBCAB 4Gx+2x1.5

Conductors	Connection starter
brown	1
black	2
blue	3
yellow/green	earth
black	T1*
black	T2*

For Canada/USA

SUBCAB xAWG/4

red	1
black	2
white	3
yellow/green	earth

SUBCAB xAWG/7

red	1
black	2
white	3
yellow	GC**
yelllow/green	earth
orange	T1*
blue	T2*

* Terminal for connection of thermal contacts in the motor and monitoring equipment.

** GC = Ground Check

TRANSPORTATION AND STORAGE

The pump can be transported and stored in a vertical or horizontal position.

- **Always lift the pump by its lifting handle – never by the motor cable or the hose.**
- **Make sure that the pump cannot roll or fall over and injure people or damage property.**

The pump is frostproof as long as it is operating or is immersed in the liquid. If the pump is raised when the temperature is below freezing, the impeller may freeze.

The pump shall be run for a short period after being raised in order to discharge all remaining water.

A frozen impeller can be thawed by allowing the pump to stand immersed in the liquid for a short period before it is started. Never use a naked flame to thaw the pump.

For longer periods of storage, the pump must be protected against moisture and heat. The impeller should be rotated occasionally (for example every other month) to prevent the seals from sticking together.

After a long period of storage, the pump should be inspected before it is taken into operation. Pay special attention to the seals and the cable entry.

Follow the instructions under the heading “Before starting”.

Before starting

- **Before starting work on the pump, make sure that the pump is isolated from the power supply and cannot be energized.**
- **Make sure that the pump cannot roll or fall over and injure people or damage property.**

Check that the visible parts on the pump and installation are undamaged and in good condition.

Check the oil level in the oil housing.

Remove the fuses or open the circuit breaker and check that the impeller can be rotated freely.

Check that the monitoring equipment (if any) works.

Check the direction of rotation. The impeller shall rotate clockwise, as viewed from above. When started, the pump will jerk in the opposite direction to the direction in which the impeller rotates. See the figure.

In the case of dry installation, check the direction of rotation through the inlet elbow access cover.

Transpose two phase leads if the impeller rotates in the wrong direction (3 ~).

In some installations the pump surface and the surrounding liquid may be hot. Bear in mind the risk of burn injuries.

Starting jerk

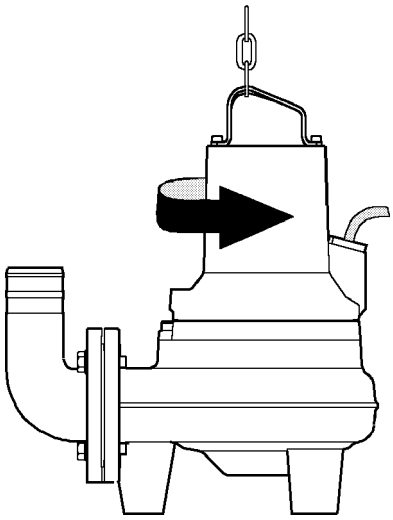

Watch out for the starting jerk, which can be powerful.

CARE AND MAINTENANCE

Before starting work on the pump, make sure that the pump is isolated from the power supply and cannot be energized.

This applies to the control circuit as well.

NOTE for Ex version

All work on the explosion-proof motor section must be performed by personnel authorized by Flygt.

Flygt disclaims all responsibility for work done by untrained, unauthorized personnel.

Make sure that the pump cannot roll or fall over and injure people or damage property.

The following points are important in connection with work on the pump:

— Make sure that the pump has been thoroughly cleaned.

— Beware of the risk of infection.

— Follow local safety regulations.

The pump is designed for use in liquids which can be hazardous to health. In order to prevent injury to the eyes and skin, observe the following points when working on the pump:

— Always wear goggles and rubber gloves.

— Rinse the pump thoroughly with clean water before starting work.

— Rinse the components in water after dismantling.

— The oil housing may be under pressure. Hold a rag over the oil screw (oil plug) to prevent splatter.

Proceed as follows if hazardous chemicals have splashed into your eyes:

— Rinse your eyes immediately in running water for 15 minutes. Hold your eyelids apart with your fingers.

— Contact an eye specialist.

On your skin:

— Remove contaminated clothes.

— Wash your skin with soap and water.

— Seek medical attention, if required.

Inspection

Regular inspection and preventive maintenance ensure more reliable operation.

The pump should be inspected at least once a year, but more frequently under severe operating conditions.

Under normal operating conditions, the pump should have a major overhaul in a service shop at least every third year for permanent installation and every year for portable pumps. This requires special tools and should be done by an authorized service shop.

If the seals have been replaced an inspection of the oil is recommended after one week of operation.

NOTE! Regular check of the condition of the lifting handle and chain is important.

Inspection of hot water applications

Pumps in hot water applications shall undergo inspection or overhaul at a service shop as follows, depending on the time they have been submerged in the hot water:

Temp.	Mode of operation	Inspection	Shop overhaul
≤70°C (160°F)	Continuous	1000 hours	4000 hours
≤70°C (160°F)	Intermittent	twice a year	once a year
≤90°C (195°F)	Cont./Int.	6 times a year	twice a year

OIL CHANGE

A check of the condition of the oil can show whether there has been leakage. Note! Air/oil mixture can be confused with water/oil mixture.

Insert a tube (or hose) into the oil hole. Cover the top end of the tube and take up a little oil from the bottom.

Change the oil if it contains too much water, i.e. if it is heavily emulsified (cream-like), or if the oil housing contains free water. Check again one week after changing the oil.

The oil housing may be under pressure. Hold a rag over the oil plug to prevent splatter.

1. Lay the pump on its side on a bench or over two supports. Unscrew the oil housing screw (oil plug) marked “oil out”. Emptying the oil must be done through the “oil out” hole.

2. Turn the pump. Unscrew the “oil in” oil hole screw/ plug. In order to drain out all oil, the pump must be raised upright for a short while during drainage.

3. Replace the O-rings under the oil housing screws (plugs) with new ones.

4. Install the “oil out” screw/plug and fill with oil through the other hole. It is important that the oil be added through the hole marked ”oil in” since the oil housing must contain some air for pressure equalization. The pump should be tilted slightly and put down again horizontally in order to get the full amount of oil in.

   A paraffin oil with viscosity close to ISO VG15 is recommended (e.g. Mobil Whiterex 309). The pump is delivered from factory with this type of oil.

   In applications where poisonous properties are of less concern, a mineral oil with viscosity up to ISO VG32 can be used.

   Please see Parts List for the correct volume.

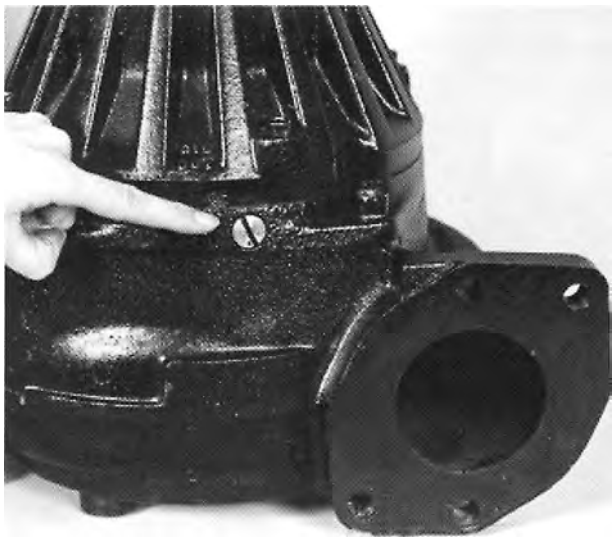

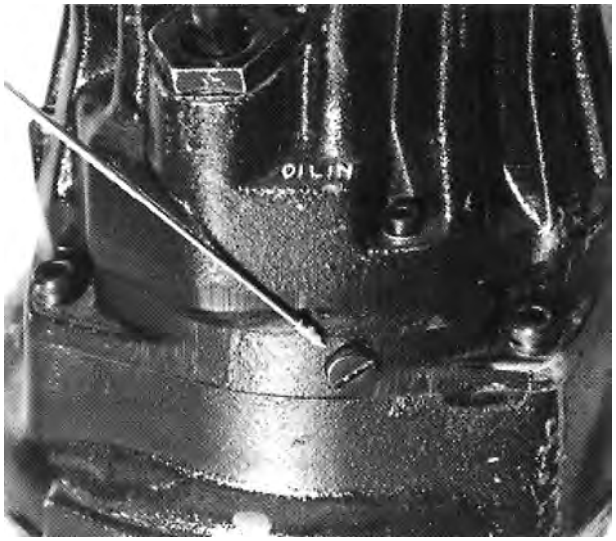

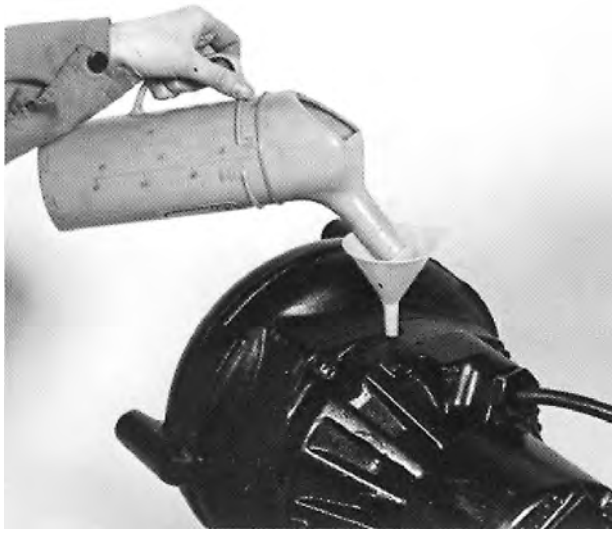

SERVICE LOG

Most recent service date	Pump No.	Hours of operation	Remarks	Sign.

Printed in Sweden KT 980964

ITT

Water & Wastewater

Flygt N-Pumps 3085, 3102 & 3127

For reliable and efficient wastewater handling

Engineered for life

Flygt N-Pump series

Reduced pumping efficiency, high energy and maintenance costs shouldn't be a fact of life in wastewater handling. The submersible Flygt N-Pump series from ITT Water & Wastewater features a radical hydraulic end design which ensures efficient, reliable and trouble-free pumping over long duty periods.

The result: improved operational economy which dramatically reduces the total life cost of your installation.

The highest efficiency values for a typical single-vane pump in a best-specific speed range are around 70%. By comparison, Flygt N-Pumps deliver 80% or better – equating to 15% less power consumption. And Flygt N-Pumps maintain this efficiency even in fluids with a high solids and fibrous content thanks to a unique semi-open self cleaning impeller. This is complemented by a special relief groove in the volute. The self-cleaning flow path through the pump greatly reduces the risk of clogging, even under the worst conditions.

Methods of installation

NS

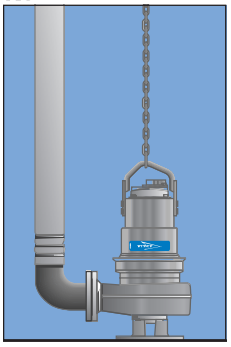

A semi-permanent, free-standing installation. Transportable version with pipe or hose connection.

NP

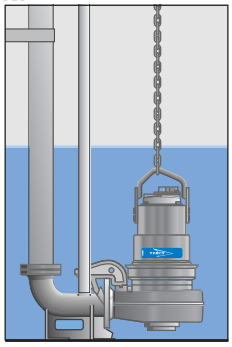

For semi-permanent wet well installations. The pump is installed with twin guide bars on a discharge connection.

NT

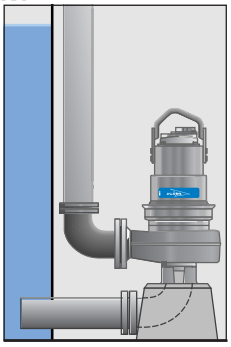

A vertically-mounted, permanent dry well or in-line installation with flange connections for suction and discharge pipe work.

NZ

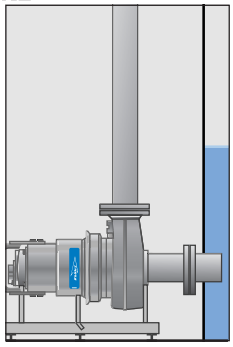

A horizontally-mounted, permanent dry well or in-line installation with flange connections for suction and discharge pipe work.

NL

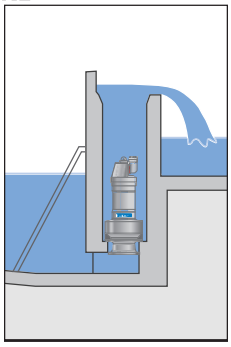

The semi-permanent installation of a pump within a vertical steel or concrete column (not available for the 3085).

Pumping capacities up to 100 l/s, 1600 gpm

Thanks to the self-cleaning advantages of the impeller and volute design, Flygt N-Pumps offer new possibilities for cost-effective operation in a wide variety of applications. These include pumping:

- Wastewater
- Cooling water
- Storm water
- Raw water
- Sludge
- Industrial effluent

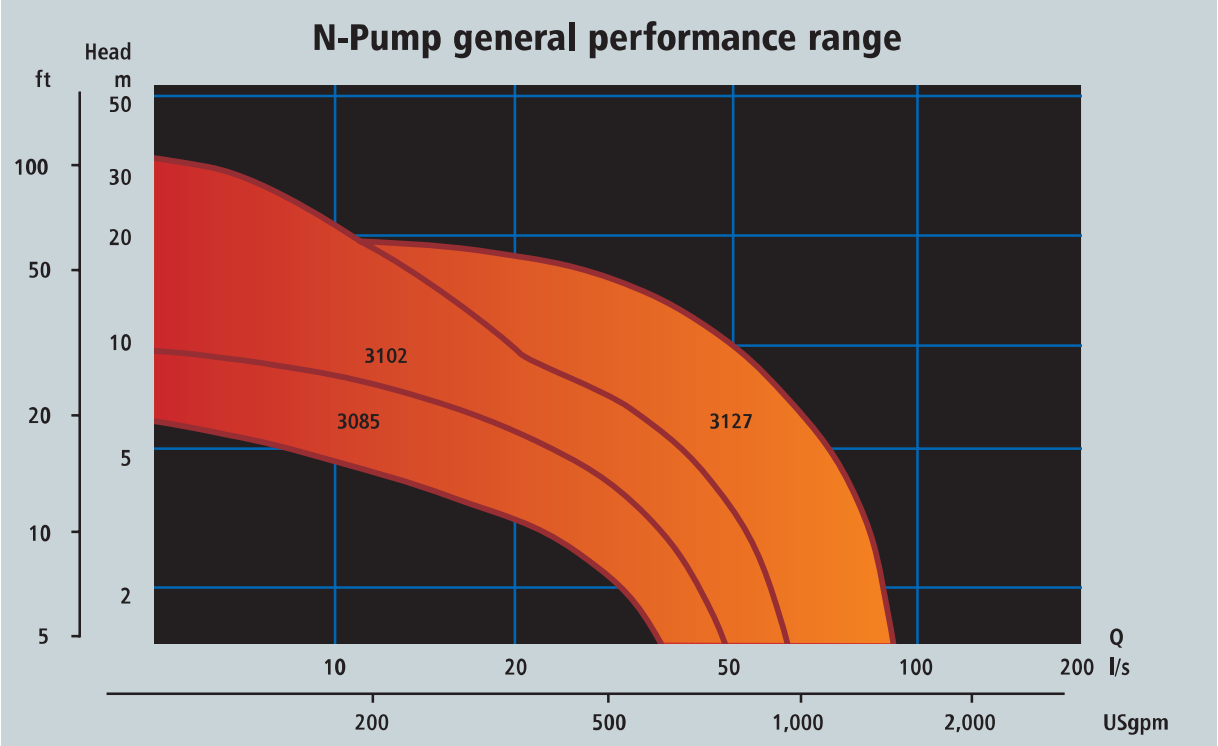

Demonstrating the pumping performance of the Flygt N-Pump series

Flygt N-pumps

Model	3085	3102	3127
Rating	50 Hz, 1.3 kW, 2 kW 60 Hz, 2.2 hp, 3 hp	50 Hz, 3.1 kW, 4,2 kW 60 Hz, 5 hp, 6 hp	50 Hz, 4.7 kW, 5.9 kW 60 Hz, 7.5 hp, 10 hp
Discharge	80 mm/3"	80 mm/3" 100 mm/4" 150 mm/6"	100 mm/4" 150 mm/6"

Choosing the optimum pump is further simplified through the use of WebFLYPS, ITT Water & Wastewater's dedicated pump selection software.

Product quality means attention to details

Motor
Squirrel cage, high performance induction motor, specially designed and manufactured by ITT Water & Wastewater for submersible use. Stator windings are trickle impregnated in resin to class H insulation and rated at 180°C (355° F) allowing for up to 30 starts per hour.

Shaft
A short overhang of the shaft virtually eliminates shaft deflection. This results in significantly increased seal and bearing life, low vibration and quiet operation.

Seals
Two sets of mechanical shaft seals that work independently for double security. Designed, patented and manufactured by ITT Water & Wastewater.

Seal wear protection
Spin-out™ is a patented design that protects the outer seal by expelling abrasive particles from the seal chamber.

Oil housing
In addition to lubricating the seals, the oil filled compartment diffuses heat from the motor and the bearings. The housing also provides additional security against penetration by liquids.

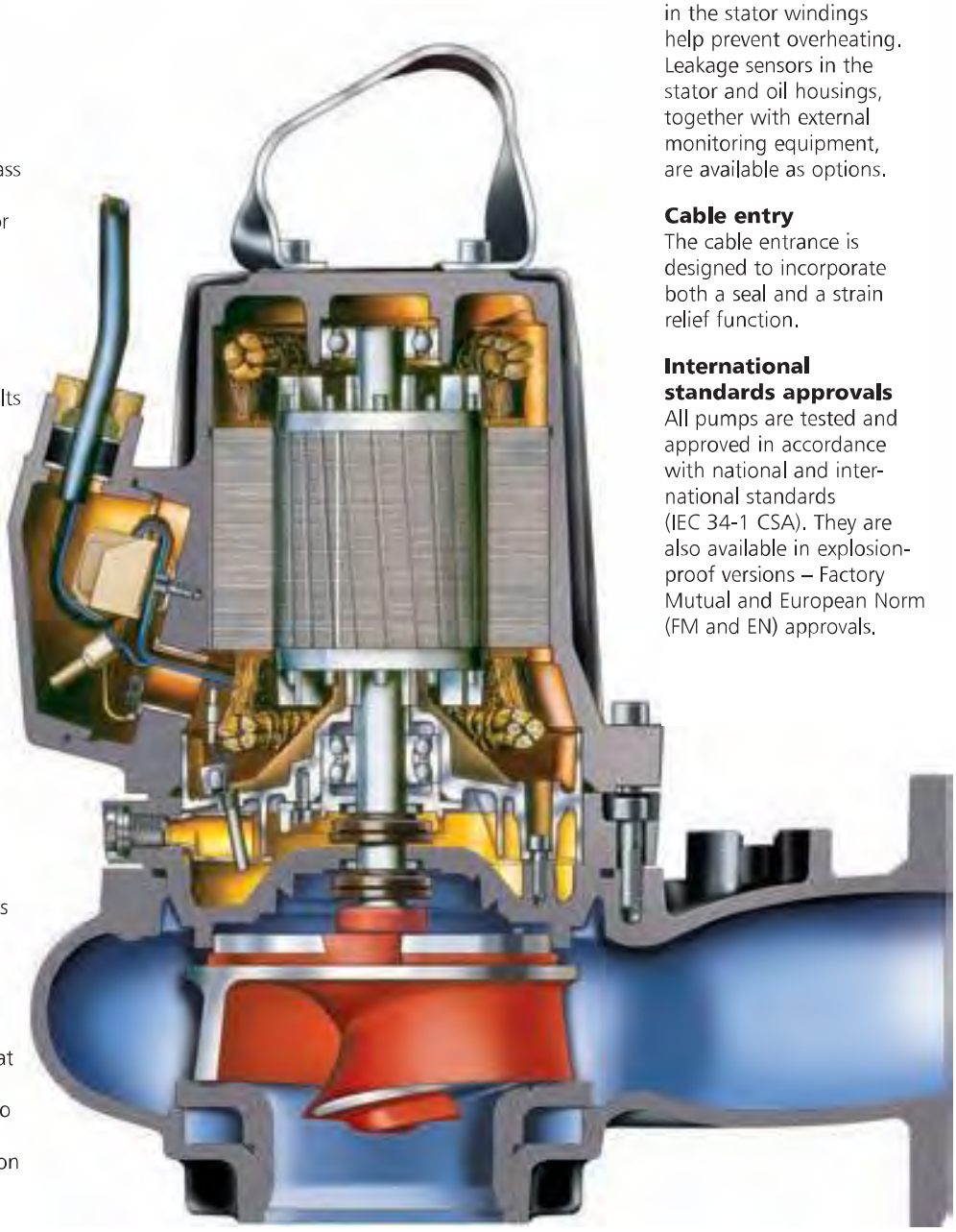

Monitoring
Thermal sensors embedded in the stator windings help prevent overheating. Leakage sensors in the stator and oil housings, together with external monitoring equipment, are available as options.

Cable entry
The cable entrance is designed to incorporate both a seal and a strain relief function.

International standards approvals
All pumps are tested and approved in accordance with national and international standards (IEC 34-1 CSA). They are also available in explosion-proof versions – Factory Mutual and European Norm (FM and EN) approvals.

Sustained higher hydraulic efficiency

The revolutionary design of the self-cleaning impeller is complemented by a special relief groove in the volute. This patented combination, which provides a self-cleaning flow path through the pump, greatly reduces the risk of clogging and makes the Flygt N-Pump series an ideal solution for high-efficiency pumping over long duty periods. That means lower overall energy consumption: a significant factor in reducing the whole life cost of your pumping operation.

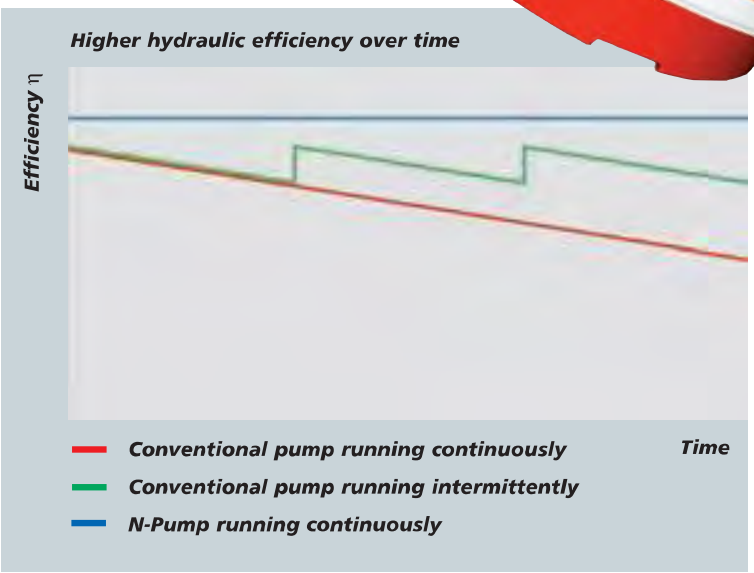

The red line in the graph shows how the efficiency decreases when a conventional wastewater pump in continuous operation gets clogged.

The green line shows how a conventional wastewater pump that runs intermittently also has a generally low efficiency due to clogging. Temporary efficiency gains may be achieved through back flushing of the pump.

The blue line shows the Flygt N-Pump performing with sustained efficiency

Keeping your station in top form

Supplying our customers with problem-free solutions is our goal at ITT Water & Wastewater – and that means more than simply supplying the correct pump for your particular application. The following are examples of some of the ancillary equipment which we can supply to improve the all-round efficiency of your operation.

The sump designed to clean itself

The unique design of The Optimal Pump station sump, with its integrated discharge connections, is an ideal cost-efficient solution for new stations and retro-fitting older stations. The sump has been hydraulically optimized to improve the flow over the sump floor during pumping.

The result: increased turbulence, causing resuspension of settled solids and the entrainment of floating debris, which can then be pumped away during the operating cycle.

Flush valve: the automatic desludger

Developed specifically to be fitted to all standard Flygt submersible pumps, the Flush Valve operates completely automatically.

Attached easily to the volute of the pump, the valve is open at the start of each pumping cycle and water is forced through the valve in a powerful jet flushing stream. Water in the sump is immediately subjected to intense turbulence, and all the sludge deposits, as well as floating solids, are re-suspended before being pumped out. The valve closes automatically after approximately 20 seconds, and reopens again after pump stop, ready for the next pumping cycle.

Flygt APF: automatic cleaning up to 40 times a day

Flygt APF is the maintenance-free control system that ensures clean stations even when you're dealing with the most heavily-contaminated wastewater.

The Flygt APF is simply connected to the main control system, which it overrides during cleaning cycles by operating the pumps down to the level at which air starts to be drawn into the pump. At this level, controlled turbulence and maximum velocities cause any solids, which have settled on the sump floor, to be drawn into the pump together with any debris floating on the surface. The unit can be programmed to operate up to 40 times a day.

Upgrading and servicing

ITT Water & Wastewater's design philosophy has always been to build equipment that gives you a maximum return for your investment: and that means designing pumps for a long service life with minimum downtime.

If you already operate an installation with Flygt C-Pumps, the Flygt N-Pump upgrade kit gives you an opportunity to further extend the operational life of your equipment and gain the superior pumping efficiencies of the Flygt N-Pump range.

Each kit contains everything you need to upgrade your existing pumps to Flygt N-Pump standard, and there's a kit available for most Flygt C-Pump models (please check with your representative which models apply). Kits are easy to install and fully supported by the ITT Water & Wastewater Service Network.

The upgrade kit allows you to:

- Cut the cost of regular and emergency maintenance by reducing the risk of clogging
- Boost the operational efficiency of your existing equipment
- Improve the return on your original investment

The N-technology is beneficial in all installations. In the most demanding applications a Guide Pin will further enhance the pump's performance. The Guide Pin effectively directs the solids towards the relief groove. The result - a self-cleaning flow path also in these applications.

World-wide service network

No two pumping stations and systems will be alike, so the level of maintenance and support that you require from your service partner will differ according to your situation. With ITT Water & Wastewater, you can choose the type of support package that precisely meets your needs.

From simply supplying pumps to your specifications, to full service assistance on system planning, design, construction, implementation, operation or maintenance: ITT Water & Wastewater's total service concept means that you get the service you need, on your terms.

15-year spare parts guarantee

We guarantee availability of spare parts for 15 years after we stop production of a pump model. This is just one of the ways in which ITT Water & Wastwater meets its long-term commitment to customers.

ITT

What can ITT Water & Wastewater do for you?

Integrated solutions for fluid handling are offered by ITT Water & Wastewater as a world leader in transport and treatment of wastewater. We provide a complete range of water, wastewater and drainage pumps, equipment for monitoring and control, units for primary and secondary biological treatment, products for filtration and disinfection, and related services. ITT Water & Wastewater, headquartered in Sweden, operates in some 140 countries across the world, with own plants in Europe, China and North and South America. The company is wholly owned by the ITT Corporation of White Plains, New York, supplier of advanced technology products and services.

www.ittwww.com

FLYGT SANITAIRE® WEDECO LEOPOLD

N-Pumps 3085-3127.08.Eng.04.08 893626 Trosa Tryckeri AB 63602

Sand Media Filtration Systems

INSTRUCTION MANUAL FOR INSTALLATION AND OPERATION

Yardney

WATER MANAGEMENT SYSTEMS

6666 BOX SPRINGS BLVD.
RIVERSIDE, CALIFORNIA 92507
Telephone 909-656-6716

YARDNEY WATER MANAGEMENT SYSTEMS
INDUSTRIAL IN-LINE SAND MEDIA FILTRATION SYSTEM (SINGLE TANK)

READ THIS MANUAL TWICE BEFORE INSTALLING!

GENERAL:

Yardney In-line Sand Media Filtration Systems are designed to remove suspended solids from industrial plant water efficiently and economically.

Water is introduced, under pressure, through the inlet valve and into the filter vessel and deflector assembly to be evenly distributed over the filter media. Minimum suggested operating pressure of the filter system is 30 PSI.

During the filtration mode suspended solids are trapped in the filter media. This filtration mode of operation continues until a sufficient amount of solids are collected to create a differential pressure of 10 PSID above the normal clean filter differential pressure. At this time the filter is automatically backwashed. This backwash mode of operation reverses the flow through the filter, causing a laminar expansion of the filter media and flushing the entrapped solid particulate out the backwash discharge line.

1. RECEIVING INSTRUCTIONS

Upon receipt of the filter system, inspect for any visible damage, missing parts, etc. If any damage is noted, advise the freight carrier and Yardney Water Management Systems at once. A damage claim should be filed with the freight company as soon as possible to avoid any unnecessary delays in the settlement of the damage claim or installation of the filter system.

2. INSTALLATION

With a few exceptions, Yardney In-line Sand Media Filter Systems are shipped completely assembled and mounted on a structural steel skid. Yardney In-line Sand Media Filter Systems are supplied complete with manifolding, valving, and automatic backwash controls.

All filter systems must be installed on a level surface that will support the equipment. It is recommended that 1/4" tolerance be the maximum allowed. A concrete base with grouting and/or shims under the structural members is generally the best method to obtain the levelness required. The grouting and/or shims should be kept to a minimum for best results. A minimum of 48" should be maintained around the filter system to allow for media loading and servicing.

All filter systems are supplied with standard FIPT pipe connections to the filter system and require the use of threaded male adapters. Refer to Chart "B" for system pipe sizes.

The backwash line piping is connected to the backwash restrictor valve on the backwash manifold. The backwash line piping should discharge into as floor drain or sump and should <u>not</u> be connected directly to a pressurized drain line.

2. INSTALLATION (continued)

If it is necessary to run the backwash piping a long distance to a drain, allowance should be made in the size and drainage of pipe to handle total backwash flow without restriction. Minimum backwash flow rates are shown in the following chart:

Specific sizes for backwash piping are shown on the chart below.

CHART "A"
IN-LINE SYSTEM BACKWASH LINE SIZING

	Backwash Flow Rate (Per Filter)	Minimum Pipe Size
IL-1824/36	26 GPM	2"
IL-2424/36	47 GPM	2"
IL-3024/36	75 GPM	3"
IL-3624/36	107 GPM	3"
IL-4824/36	189 GPM	4"

Restriction of backwash flow from filters after the restrictor valve to the drain will have an adverse effect on the overall backflushing capability and could lead to inadequate cleaning of the filter during the backwash cycle.

CHART "B"
IN-LINE SINGLE TANK SYSTEM GENERAL INFORMATION

FILTER MODEL	FILTRATION AREA SQ. FT. (PER FILTER)	MAXIMUM OPERATING PRESSURE	PIPE SIZE INLET/OUTLET (INCHES)	BACKWASH PIPE SIZE (INCHES)
IL-1824-1	1.75 SQ. FT.	100 PSI	2"FIPT	2" FIPT
IL-1836-1	1.75 SQ. FT.	100 PSI	2" FIPT	2" FIPT
IL-2424-1	3.15 SQ. FT.	100 PSI	2" FIPT	2" FIPT
IL-2436-1	3.15 SQ. FT.	100 PSI	2" FIPT	2" FIPT
IL-3024-1	4.91 SQ. FT.	100 PSI	3" FIPT	3" FIPT
IL-3036-1	4.91 SQ. FT.	100 PSI	3" FIPT	3" FIPT
IL-3624-1	7.10 SQ. FT.	100 PSI	3"FIPT	3" FIPT
IL-3636-1	7.10 SQ. FT.	100 PSI	3" FIPT	3" FIPT
IL-4824-1	12.6 SQ. FT.	80 PSI	4" FIPT	4" FIPT
IL-4836-1	12.6 SQ. FT.	80 PSI	4" FIPT	4" FIPT

READ THIS MANUAL TWICE BEFORE INSTALLING!

3. SINGLE MEDIA INSTALLATION

The single media filtration system consists of one grade of crushed rock gravel pack for media support and one grade of silica sand filtration media. The crushed rock is used for supporting the filter media and also to provide even distribution of flow during backwash. (Media chart and diagram on page 4.)

THE CRUSHED ROCK MUST BE THOROUGHLY WASHED PRIOR TO LOADING INTO THE FILTER. FAILURE TO WASH THE CRUSHED ROCK COULD LEAD TO COMPROMISED FILTER PERFORMANCE AND A FOULED UNDERDRAIN UPON START-UP. ALWAYS LOAD THE GRAVEL FROM THE SIDE MANWAY.

The crushed rock should be placed well around the collection laterals. The gravel pack is used to separate the laterals from the media and protect the laterals from damage and fouling during media loading.

Note: Installers should wear appropriate dust masks when working inside the vessel during media installation. Adequate ventilation and air sourcing should be maintained.

Once the crushed rock has been installed and packed around the collection laterals, it should be raked moderately level. The succeeding layer of media should now be installed.

Remove all foreign material (i.e. pieces of media bagging material, etc.) from the filter vessel. Clean all sealing surfaces of the manway. Chipping of the vessel lining may occur unless the sealing surfaces are free of sand, grit, etc. Close the manway.

4. INITIAL MEDIA CLEANSING

Despite cleaning of the media prior to packaging, a certain amount of "fines" will be present in the media supplied. Serious operational problems could result if these "fines" remain in the filter during operation. Thus, it is necessary to clean the media prior to operating the filter system.

In order to accomplish this, the filter should be filled with water after media loading. This water should be as clean as possible. The media should soak for 6-12 hours.

The media should be backwashed after the soaking period using the backwash sequence designed for this filter system. It is recommended that the backwash system be performed using the manual start mode of operation. By using the manual start mode, the operator will become familiar with the filter system and will also be able to spot any potential operational problems prior to actual automatic operation of the filter system. The filter media should be backwashed until such time as the backwash water becomes clear. A quick check of the backwash water may be made by filling a glass container with the water as it exits the filter. The container should not have any sedimentation or media "fines" at the bottom after the water has settled.

READ THIS MANUAL TWICE BEFORE INSTALLING!

FILTER TANK LOADING TABLE

24" Deep Tank Sideshell

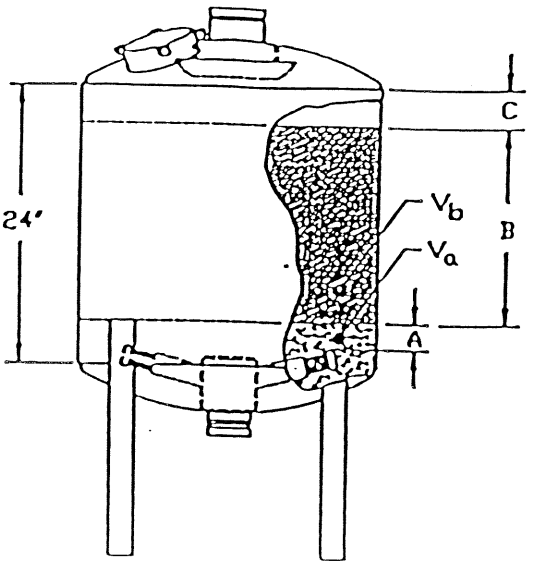

36" Deep Tank Sideshell

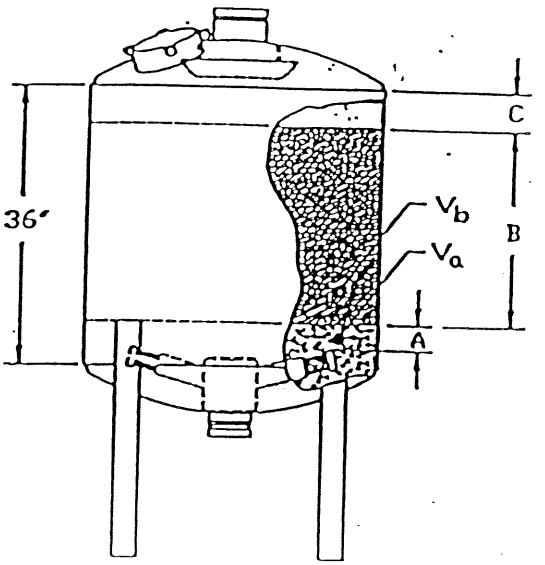

24" Deep Tank Sideshell

FILTER DIAMETER (Inches)	1/2" to 3/4" CRUSHED ROCK A (inches)	Va (Cubic Feet)	MEDIA B (Inches)	Vb (cubic feet)	C (Inches)
18	2	1.0	17.0	2.5	3
24	2	1.5	17.5	4.5	3
30	2	2.5	17.5	7.0	3
36	2	4.0	17.0	10.0	3
48	2	7.0	20.0	21.0	3

36" Deep Tank Sideshell

FILTER DIAMETER (Inches)	1/2" to 3/4" CRUSHED ROCK A (inches)	Va (Cubic Feet)	MEDIA B (Inches)	Vb (cubic feet)	C (Inches)
18	2	1.0	29.0	4.5	3
24	2	1.5	29.5	7.5	3
30	2	2.5	29.5	12.0	3
36	2	4.0	29.0	17.0	3
48	2	7.0	32.0	33.5	3

NOTE: ALL DIMENSIONS AND VOLUMES ARE APPROXIMATE.

Yardney Water Management Systems
Riverside, CA U.S.A.
(909) 656-6716 Fax (909) 656-3867

5. ROUTINE MEDIA CLEANING THROUGH AUTOMATIC BACKWASHING

The filter media should be cleaned on a routine basis. The length of the filtering cycle between cleaning sequence is dependent upon how dirty the source water is. Typical filtering cycles are in the 6-12 hour range. However, some applications allow for a much longer cycle; or in some cases, a shorter cycle.

The factor which determines the length of the filtering cycle is the filter media bed differential pressure. The differential pressure is determined by reading the influent and effluent pressure gauges. Subtract the effluent pressure gauge reading from the influent pressure gauge reading. The difference is the media bed differential pressure. The filter system should be cleaned when the differential pressure reaches approximately 10 PSID more than the clean filter pressure differential.

It is recommended that a filter be cleaned at least once a day, regardless of the application or differential pressure. The cleaning sequence of a filter system varies from one step (for simple systems) to as many as twenty (for more complex systems). If the system is comprised of several filters, the cleaning sequence steps would be multiplied by the number of filter tanks. Regardless of the complex nature of the system, all filters are cleaned by reversing the water flow inside of the filter.

In a "simple cleaning sequence," valve manipulation will occur simultaneously. In a "complex cleaning sequence," valve manipulation will occur over several minutes. Typical valve sequencing is controlled by the automatic control system.

6. DIAPHRAGM VALVES

The Single Tank Inline Series sand media filter utilizes four (4) air activated (standard) or hydraulically activated (optional) diaphragm valves for routing of water during filtration and backwash. The standard system is designed to use air pressure to activate the four (4) valves. The air supply to the valves should be regulated to provide air pressure equal to or slightly higher than the system operating pressure.

NOTE: On systems that are supplied with hydraulically activated valves, see page 8.

Air supply must be maintained at all times when the filter is in operation. The "backwash in" and "backwash out" valves require a continuous supply of air to maintain the closed position. If air supply fails, the "backwash in" and "backwash out" valves will revert to the open position.

When the filter is in the **filtration cycle**, the valve position is as follows:

Inlet	open
Outlet	open
Backwash In	closed
Backwash Out	closed

When the filter is in the **backwash cycle** the valve position is as follows:

Inlet	closed
Outlet	closed
Backwash In	open
Backwash Out	open

When the backwash cycle has been completed, the valves will automatically revert back to the position for the filtering cycle.

AIR ACTUATED VALVES

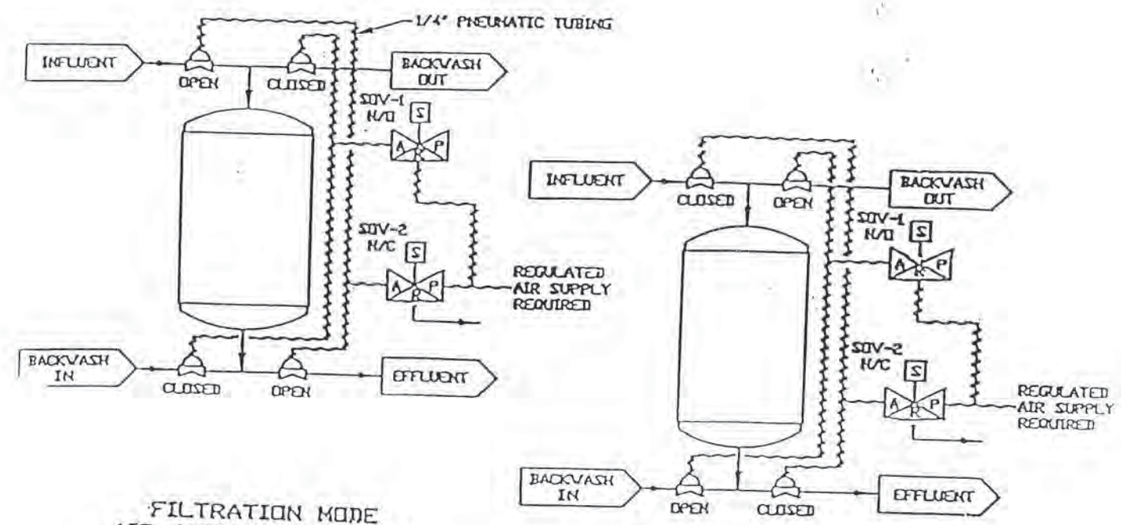

FILTRATION MODE
AIR ACTUATED VALVES

BACKWASH MODE
AIR ACTUATED VALVES

AIR POWERED VALVES – STANDARD

The air supply to operate the valves is connected to the pressure port on the lower solenoid valve, mounted on the backwash controller. The lower solenoid valve which is normally closed, supplies the pressure to the influent and effluent valves. The upper solenoid valve, which is normally open, supplies pressure to the backwash "IN" and backwash "OUT" valves.

When a backwash cycle is initiated, both solenoids are energized simultaneously changing the direction of air flow to the valves.

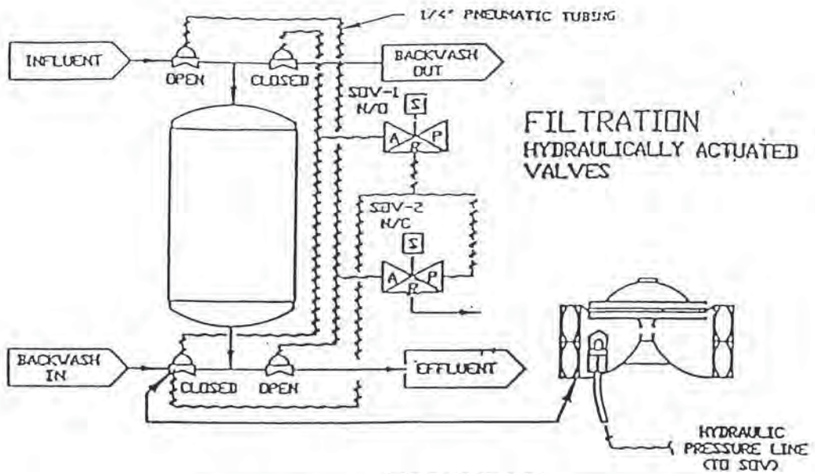

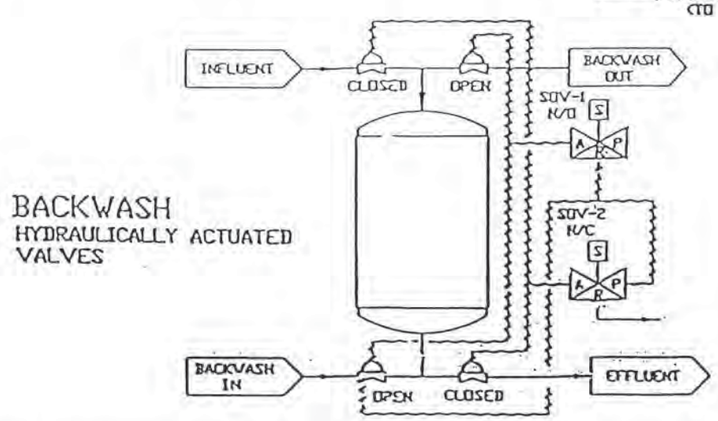

WATER POWERED VALVES – OPTIONAL

The hydraulic pressure supply to operate the valves is sourced from the normally closed valve on the backwash source of the filter. This supply is filtered through a small strainer inserted in the valve. The strainer should be cleaned during normal maintenance to remove any build-up or foreign material.

7. OPERATION OF THE AUTOMATIC CONTROLS

Yardney Industrial Filters are normally supplied with solid state electronic controls (see Yardney Ultra 116-I controller instructions, contained within the control box). The control box operation is simple and is detailed in the separate instruction manual.

7.1 Periodic
Hours Dial - Sets the time between backflushes. It can be set from once every 15 minutes to once every 7 days.

7.2 Flush Time
Minutes Dial - Sets the duration of the backflush from 5-240 seconds.

7.3 Main Power - Turns control system "ON" or "OFF".

7.4 Test/Manual - Initiates a manual backwash.

7.5 Re-Set - Circuit breaker.

7.6 Pressure Differential
The system is designed to be used with the supplied pressure differential switch - gauge that senses a differential in pressure across the filter bed as the contaminant accumulates in the filter bed. When a pressure drop through the filter reaches the setting on the gauge, the switch will initiate a backwash after sensing the sustained pressure loss for more than 30 seconds.

8. INITIAL SETTINGS FOR THE AUTOMATIC CONTROLS

8.1 Periodic
Hours Setting - During start-up, the filters should be backwashed every two hours. After observing how rapidly the filters "load-up," the interval between back-washing can be increased to as long as once every 7 days, depending on the amount of contaminant in the source water.

8.2 Flush Duration
Minutes Setting - During start-up and initial operation, the backwash duration should be set for 2-1/2 to 3 minutes. The minimum back-wash duration should be set at 2 minutes.

8.3 Pressure Differential Switch
The P.D. Switch gauge is field adjustable by rotating the black adjustment knob clockwise to desired set point. We recommend that the maximum adjustment be no more than 10 PSI over the clean filter pressure differential.

Example: **If the clean filter pressure differential is 6 lbs., the backwash pressure differential set point should be set at 16 lbs.**

9. THE BACKWASH FUNCTION

Backwashing the filter is the process by which water flows upward through the filter bed, lifting and expanding the media, allowing it to release the collected contaminant. Excessive backwash flow will expand the media to the point that the media itself is expelled out of the tank. Insufficient backwash flow will not expand the media enough to purge all the entrapped contaminant.

This could result in a residual pressure loss through the bed, even after backwash. To achieve maximum filter performance, the backwash flow must be properly adjusted.

Backwash Flow Control Adjustment Procedure

a) Prior to adjustment, the filter must run to fill the system to the designed pressure and flow. The system discharge flow control valve should be adjusted prior to making the backwash flow adjustment.
b) Open the backwash control gate valve approximately one turn.
c) Depress the "Test/Manual" switch on the controller. This will put the filter into a backwash cycle for the length of time set on the "Duration" dial. This sequence may have to be done more than once to provide enough time for proper backwash adjustments.
d) Using a piece of screen or a sampling device, monitor the content of the backwash water.
e) If media shows in the backwash water, gradually close the backwash control gate valve until the water is showing only a slight trace of media. If no media is showing, gradually open the control gate valve until a trace of media is showing. A trace of media on a newly installed filter is acceptable since it is desirable that the lighter granules (fines) in the new media bed be allowed to wash out. After adjustment of the backwash adjustment valve the handle should be removed or secured to avoid tampering.

OPTIONAL EXTERNAL WATER BACKWASH

On Inline Series industrial filters that will utilize municipal or other clean water for backwashing, the following instructions should be followed.

The clean water supply for backwashing is connected to the normally closed valve marked "Backwash In". The amount of water required for backwashing can be found in Chart "A" on page 2 of this manual.

The correct backwash flow can be achieved by either of the following two methods. The first method requires adjusting the flow of the **external supply** before the filter. This can be achieved by using a flow regulating device installed in the external supply line. The other method is to adjust the backwash flow by using the brass gate valve (as described above) that is supplied on the backwash manifold. Either method will provide for correct adjustment of the backwash flow.

If the system utilizes hydraulic pressure to activate the valves, then the water system should be operational prior to turning on the clean water supply. If not, the "Backflush In" valve will be in the "OPEN" position allowing the water to flow into the system.

On systems that utilize air pressure to activate the valves, the air pressure to the valves should be "ON" prior to starting the filter system.

> **NOTE:** Provisions should be made to either by-pass the filter system or shut down the filter feed pump during back-flushing cycle. If the pump is allowed to run, then a "deadhead" condition on the pump could result in damage to the pump.
>
> If supply for backwash has a higher pressure than the system operating pressure on the filter system, then the air supply should be regulated to provide equal or higher on this supply.

YARDNEY WATER MANAGEMENT SYSTEMS
INDUSTRIAL IN-LINE SAND MEDIA FILTRATION SYSTEM (SINGLE TANK)

READ THIS MANUAL TWICE BEFORE INSTALLING!

RECOMMENDED SPARE PARTS

		Part Number
1.	**Electrical**	
	Solenoid valve 12VDC	166001247
	Pressure differential switch 20 DPK	166070030
2.	**Gauges**	
	0-100 PSI glycerin filled, SS body	144025100
3.	**Valves (Replacement Diaphragms)**	
	2" Diaphragm EPDM	136090200
	For filter size IL-14, 18, 24	
	3" Diaphragm EPDM	136090300
	For filter size IL-30, 36	
	4" Diaphragm EPDM	136090400
	For filter size IL-48	
4.	**Gaskets for Grooved Couplings**	
	1-1/2" for filter size IL-18, 24, 30	108560150
	2" for filter size IL-18, 24	108560200
	3" for filter size IL-30, 36	108560300
	4" for filter size IL-24,30, 36, 48	108560400
5.	**Lid Gaskets**	
	Side Manway – 9-3/4" X 7-3/4"	142023036
	For filter size IL-18, IL-24, IL-30	
	Side Manway – 14-1/4" OD	140031114
	For filter size IL-36, IL-48	
	Top Manway – 5-1/4" x 4"	142021418
	For filter size IL-14, IL-18	
	Top Manway – 7-5/16" X 5-1/8"	142022400
	For filter size IL-24	
	Top Manway – 9-3/4" X 7-3/4"	142023036
	For filter size IL-30, IL-36	
	Top Manway – 14-1/4"OD	140031114
	For filter size IL-48	
6.	**Filtration Media**	
	1/2" x 3/4" crushed rock (80 lbs. Bags)	148055075
	.47mm silica (100 lb. Bags)	148020047

Yardney Water Management Systems
Riverside, CA U.S.A.
(909) 656-6716 Fax (909) 656-3867

05/01

BAKERCORP™

VCC 8x30 Virgin Coconut Shell Carbon

BakerCorp's VCC 8x30 mesh virgin carbon made from select grades of coconut shell. These activated carbon granules are a uniform adsorbent with well developed pore structure, allowing for a wide range of adsorbate retention. This carbon is ideal for purification of potable water, industrial wastewater treatment and groundwater treatment. This product is also suitable for refinement of organic liquids requiring purification and color reduction, such as amine and glycol solutions and will remove MTBE from groundwater.

PHYSICAL PROPERTIES:

Carbon Tetrachloride Activity:	60% minimum
Apparent Density (lbs./cu.ft.):	29 average
Total Ash Content:	3% maximum
Hardness (Ball Abrasion):	98% minimum
Iodine Number:	1,000 minimum
Moisture (as packed):	5% maximum
Mesh Size:	8x30

Standard Packaging: 1000 lb. super sacks. Other packaging available upon request.

These specifications represent general parameters and are subject to change. Please consult with BakerCorp before processing with your applications.

4306 W. 190th Street, Torrance, California 90504
Phone: 310.303.3700 ♦ Fax: 310.406.3001

4306 West 190th Street, Torrance, CA 90504
Tel: 310.303-3700 ♦ Fax: 310.406-3001

Activated Carbon and Specialty Media
Pollution Control Systems and Filtration Equipment Rental

MATERIAL SAFETY DATA SHEET

DATE OF ISSUE: June 6, 2005

SECTION I- GENERAL INFORMATION

MANUFACTURER NAME: **BakerCorp 310.303.3700**
4306 West 190th Street, Torrance, CA 90504

CHEMICAL NAMES & SYNONYMS: Activated Carbon, Activated Coconut, Activated Charcoal, Char
TRADE NAMES & SYNONYMS: **Activated Carbon**
CHEMICAL FAMILY: Amorphous Carbon, Activated Coconut FORMULA: Carbon atom in a crystallite structure has an infinite molecular weight, Anthracite Coal, Sub-Bituminous Coal, Bituminous Coal CAS NO. 7440-440

SECTION II- HAZARDOUS INGREDIENTS

CHEMICAL NAME (Ingredients) [% TLV (Units)]: No Hazardous Ingredients
HAZARDOUS MIXTURES OF OTHER LIQUIDS, SOLIDS, OR GASSES [% TLV (Units)]: LIQUIDS
Activated Carbons that have adsorbed other carbon or non-carbon liquids or gasses may lower or raise the ignition point and must be laboratory checked for ignition point when expended.

SECTION III- PHYSICAL DATA

BOILING POINT (DEG F): 4200 SPECIFIC GRAVITY (H2O-1): 1.8-2.1
VAPOR PRESSURE (MM HG) N/A PERCENT VOLATILE BY VOLUME: none
VAPOR DENSITY (AIR=1): N/A EVAPORATION RATE: none
SOLUBILITY IN WATER: insoluble
IGNITION TEMPERATURE: 600 deg C
APPEARANCE & ODOR: Odorless, black granular solid

SECTION IV- FIRE HAZARD & EXPLOSIVE DATA

FLASH POINT (method used): none
FLAMMABLE LIMITS: Lower Explosive Limit: N/A Upper Explosive Limit: N/A
EXTINGUISHED MEDIA: Use media for class A fires: Foam, multipurpose dry chemical and water type extinguishers.
SPECIAL FIRE FIGHTING PROCEDURES: none
UNUSUAL FIRE & EXPLOSION HAZARDS: Provide for the handling of dry flowing solids in grounded equipment to prevent build up of static electric charge especially when explosive dust or vapor mixtures may exist in confined areas. Also provide for pressure relief devices following the principles set forth in the National Fire Protection Association Explosion Preventing Guide
NFPS68-1854.

SECTION V- HEALTH HAZARD DATA

THRESHOLD LIMIT VALUE: Avoid exposure to dust levels 15 mg per cubic meter.
(Federal), 10 mg per cubic meter (California State).
EFFECTS OF OVEREXPOSURE: Temporary dryness to mucous membrane causing coughing and minor nose and throat irritation.
EMERGENCY AND FIRST AID PROCEDURES: Wash mouth with water-no other treatment required.
Use protective respiratory equipment to avoid inhaling carbon dust.

SECTION VI- REACTIVITY DATA

STABILITY: UNSTABLE→ STABLE→ **X**
CONDITIONS TO AVOID: Activated Carbon is chemically inert
INCOMPATABILITY (Materials to avoid): none
HAZARDOUS DECOMPOSITION PRODUCTS: none
HAZARDOUS POLYMERIZATION: MAY OCCUR→ WILL NOT OCCUR→**X**

SECTION VII- SPILL OR LEAK PROCEDURES

STEPS TO BE TAKEN IN CASE MATERIAL IS RELEASED OR SPILLED: Spills can create nuisance dust and house keeping problems. Vacuuming is best clean up procedure.
WASTE DISPOSAL METHOD: Wet or dry activated carbon is best disposed of by landfill.

SECTION VIII-PROTECTION INFORMATION

RESPIRATORY PROTECTION (Specify Type): Respiratory classifications table G-2 part 1910.93 (OESHA) Rules & Regulations.
VENTILATION: LOCAL EXHAUST: Vacuum to control dust
PROTECTIVE GLOVES: None required
EYE PROTECTION: For airborne dust
OTHER PROTECTIVE EQUIPMENT: Protective clothing should be worn during handling to protect against airborne dust.

SECTION IX- SPECIAL PRECAUTIONS

PRECAUTIONS TO BE TAKEN IN HANDLING AND STORING: Packaged activated carbon is not resistant to weather or outside storage and requires indoor Type I and Type II storage facilities.
OTHER PRECAUTIONS: Check oxygen content of atmosphere of any vessel containing activated carbon before allowing entry of personnel.

SECTION X- TRANSPORTATION DATA

PROPER SHIPPING (Article) NAME: Steam Activated Carbon, Non-Regulated ***OR*** Carbon, Activated, Non-Regulated
DOT CLASSIFICATION: NMFC 40560 / DOT MARKING: N/A / DOT PLACARD: N/A
EMERGENCY ACCIDENT PRECAUTIONS AND PROCEDURES:
Contact: BakerCorp
Phone: 310.303.3700
PRECAUTIONS TO BE TAKEN IN TRANSPORTATION: N/A

The information contained herein is based on data considered accurate in light of current formulation. However, no warranty is expressed or implied regarding the accuracy of this data or the results to be obtained from the use thereof.

4306 W. 190th Street, Torrance, California 90504
Phone: 310.303.3700 ♦ Fax: 310.406.3001

BIOMIN Inc.

Makers of OilSorb™ and Other State-of-the-Art Filtration Media

P.O. Box 20028
Ferndale, MI 48220
(248) 544-2552

HEALTH	
FLAMMABILITY	
REACTIVITY	
PERSONAL PROTECTION	E

MATERIAL SAFETY DATA SHEET

An explanation of the terms used herein maybe found in OSHA 29 CFR 1910. 1200, available from OSHA regional or area offices.
(Essentially similar to U.S. Department of Labor Form OSHA-20 and generally accepted in Canada for information purposes.)
Do Not Duplicate This Form. Request an Original.

DATE OF PREPARATION 3/25/04	Emergency Telephone No. (248) 544-2552 Information Telephone No. (248) 544-2552

SECTION I – PRODUCT IDENTIFICATION

PRODUCT NUMBER		CAS NO. 68911-87-5
PRODUCT NAME	OilSorb™ Organoclay	
PRODUCT CLASS	EC-100, EC-200, EC-150	

SECTION II – HAZARDOUS INGREDIENTS

INGREDIENT	PERCENT	OCCUPATIONAL EXPOSURE LIMITS	VAPOR PRESSURE
Quaternary Amine	2	TLV 0.1 PEL 0.1 mg/m3	
Anthrazite, Bentonite, Quartz			
None			

SECTION III – PHYSICAL DATA

BOILING RANGE	Not Applicable	VAPOR DENSITY	Not Applicable
EVAPORATION RATE	Not Applicable	% VOLATILE WEIGHT	<2.5%
Black and tan speckled granules		WT/GAL	6

SECTION IV – FIRE AND EXPLOSION HAZARD DATA

FLAMMABILITY CLASSIFICATION OSHA _____ DOT _____ FLASH POINT Not Applicable LEL *0.07 oz/ft^3

EXTINGUISHING MEDIA:
FOAM "ALCOHOL" FOAM CO_2 DRY CHEMICAL WATER FOG OTHER

UNUSUAL FIRE AND EXPLOSION HAZARDS does not normally present a fire or explosion hazard, but dust concentrations greater than 0.07 oz/ft^3 may ignite at 510°C or when exposed to a spark or other ignition source.

SPECIAL FIREFIGHTING PROCEDURES Thin film temperature is 190°C. Flood with water if ignites. Normal precautions for flammable dusts should be followed.

SECTION V – HEALTH HAZARD DATA

EFFECTS OF OVER-EXPOSURE No known effects.

MEDICAL CONDITIONS PRONE TO AGGRAVATION BY EXPOSURE
Continued exposure to dust to skin and/or mucous membranes may cause drying of exposed areas. Avoid chronic inhalation of dust.

PRIMARY ROUTE(S) OF ENTRY DERMAL INHALATION INGESTION

EMERGENCY AND FIRST AID PROCEDURES
No special procedures.

SECTION VI – REACTIVITY DATA

STABILITY UNSTABLE STABLE

HAZARDOUS POLYMERIZATION MAY OCCUR WILL NOT OCCUR

HAZARDOUS DECOMPOSITION PRODUCTS None

CONDITIONS TO AVOID
Avoid exposure of dust aerosol to spark or open flame.

INCOMPATIBILITY (MATERIALS TO AVOID) None

SECTION VII – SPILL OR LEAK PROCEDURES

STEPS TO BE TAKEN IN CASE MATERIAL IS RELEASED OR SPILLED
Spilled powder may be collected by shoveling or sweeping provided respirator and eye protection are worn. Care should be exercised to prevent high dust concentrations in the air.

WASTE DISPOSAL
Solid waste disposal. Suitable for incineration.

SECTION VIII – SAFE HANDLING AND USE INFORMATION

RESPIRATORY PROTECTION Dust mask required

VENTILATION Adequate dust collection system should be used to avoid formation of dust aerosol.

PROTECTIVE GLOVES Recommended.

EYE PROTECTION Goggles or safety glasses.

OTHER PROTECTIVE EQUIPMENT None

HYGIENIC PRACTICES Avoid breathing dust.

SECTION IX – SPECIAL PRECAUTIONS

PRECAUTIONS TO BE TAKEN IN HANDLING AND STORING

Precautions for finely divided, flammable dust should be followed. Avoid high dust concentrations. Use adequate dust collection equipment. Insure all equipment is properly grounded to prevent static discharge. Keep dust away from open flame, heat, sparks, electrical equipment.

OTHER PRECAUTIONS None

Mc Propeller Meter

Mc Propeller Flowmeters

Installation, Operation And Maintenance Manual

24517-11 Rev. 3.5
August, 2011

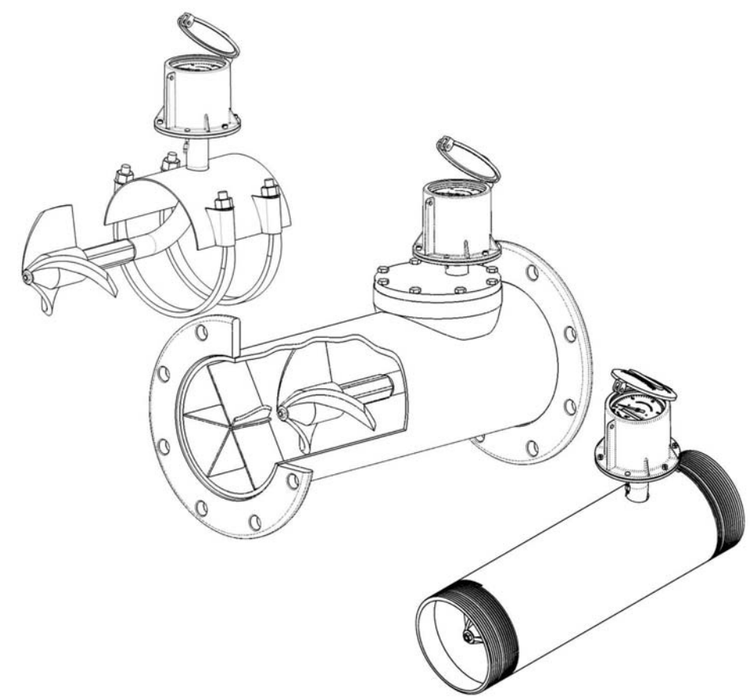

McCROMETER

TABLE OF CONTENTS

1.0 INTRODUCTION 1
- 1.1 MODEL TYPES 1
- 1.2 TYPICAL APPLICATIONS 1

2.0 SPECIFICATIONS 2
- 2.1 GENERAL SPECIFICATIONS 2
- 2.2 HOW TO READ A TOTALIZER 2
- 2.3 UNDERSTANDING THE REGISTER GEAR RATIO 3
- 2.4 ACCURACY 4
- 2.5 HEADLOSS 4

3.0 INSTALLATION INSTRUCTIONS 5
- 3.1 SAFETY 5
- 3.2 STRAIGHTENING VANES 5
- 3.3 INSTALLATION CONSIDERATIONS 5
- 3.4 PIPE RUN REQUIREMENTS 6
- 3.5 FLOW DIRECTION 7

4.0 METER CONSTRUCTION 7
- 4.1 COMMON PARTS 7
- 4.2 PROPELLER 8
- 4.3 BEARING ASSEMBLY 8
- 4.4 DRIVE ASSEMBLY 9
- 4.5 METERHEAD 9
- 4.6 REGISTER EXTENSION 10

5.0 MAINTENANCE AND TROUBLESHOOTING 11
- 5.1 OCCASIONAL INSPECTIONS 11
- 5.2 TOOLS LIST 11
- 5.3 DISASSEMBLY AND INSPECTION PROCEDURE 12
- 5.4 ORDERING REPLACEMENT PARTS 13
- 5.5 REASSEMBLY PROCEDURE 14

6.0 TECHNICAL SPECIFICATIONS 14

TECHNICAL SUPPORT 14

METER MODEL DRAWINGS 15
- MF100, MG100, MS100. MT100 2" - 3" 15
- MF100, MZ100, MZ200, MG100, MS100, MT104, MT106 4" - 24" 16
- ML100 17
- M0300 18
- M0300SW 19
- M0304 20
- MW/QW500, MG900, MT900, MW900 2" - 3" 21
- MW500, MW600, MG/MW900, MT904, MT906 4" - 24" 22
- MZ500 23
- QW500 24
- M1104 25
- M1400 26
- M1708 THROUGH M1736 27
- MM803 THROUGH MM816 28
- MW803 THROUGH MW824 29

WARRANTY 30

Copyright © 1997-2011 McCrometer, Inc. All printed material should not be changed or altered without permission of McCrometer. Any published technical data and instructions are subject to change without notice. Contact your McCrometer representative for current technical data and instructions. Mc® of Mc Propeller is a registered trademark of McCrometer, Inc.

McCROMETER
www.mccrometer.com

3255 WEST STETSON AVENUE • HEMET, CALIFORNIA 92545 USA
TEL: 951-652-6811 • 800-220-2279 • FAX: 951-652-3078 Printed In The U.S.A.
Lit. #24517-11 Rev. 3.5/08-11

1.0 INTRODUCTION

Propeller flowmeters are widely accepted as a proven technology for measuring flow with high accuracy and excellent repeatability. McCrometer Inc. produces propeller flowmeters used around the world for agricultural, municipal, and industrial applications. Typical Mc Propeller Flowmeter configurations are shown in Figure: 1 below.

1.1 MODEL TYPES

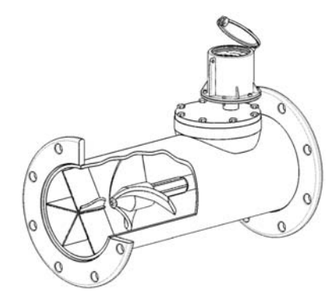

Removeable Top-Plate - MZ500 Shown

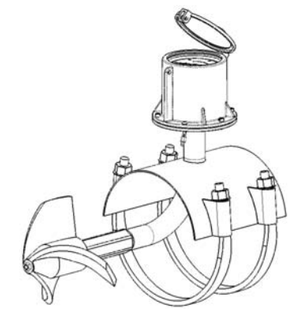

Saddle Type - M0300 Shown

Open Flow - M1700 Shown

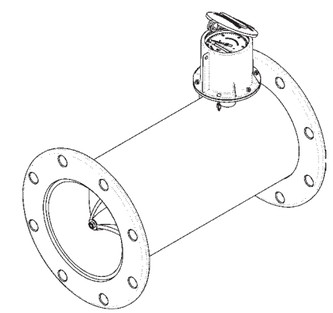

Fixed Ell - MF100 Shown

Figure: 1 Typical Mc Propeller Flowmeter Configurations

1.2 TYPICAL APPLICATIONS

- Sprinkler irrigation systems
- Center pivot systems
- Farm turnouts from irrigation districts
- Drip irrigation systems
- Golf course and park management
- Remote indication, totalizing, & recording
- Commercial nurseries
- Multi-stage pump actuation and control
- Raw water intake
- Water and wastewater management
- Plant effluent
- Valve actuation and control
- Return activated sludge
- Hot water & petroleum mixtures
- Process batching & chemical feed

2.0 SPECIFICATIONS

The measuring element of a propeller flowmeter consists of a rotating device, called a rotor or propeller. Positioned in the center of the flowstream, the propeller rotates at a rate proportional to the velocity of the fluid through the flowmeter. This rotation can be transmitted mechanically to a register assembly and the fluid's volumetric flowrate and accumulated volume can then be displayed.

2.1 GENERAL SPECIFICATIONS

DESCRIPTIONS:

TURNDOWN: Propeller meters are specified to work within a certain range of flowrates. Turndown is the ratio of the maximum flowrate to the minimum flowrate of the meter. A typical turndown of an 8" meter is 15:1. (e.g., max. flow = 1500 gpm to min. flow = 100 gpm)

ACCURACY: Accuracy shows how close the measurement of the meter is to the actual flow in the pipe. Within its turndown (described above), the reading of the meter is guaranteed to be ±2% of the actual flow.

SIZES AVAILABLE	2" to 96"
FLOWRATES AVAILABLE	40 to 75,000 GPM
TURNDOWN	up to 15:1
ACCURACY	±2%
REPEATABILITY	±0.25%
RATED PRESSURE	150 PSI
RATED TEMPERATURE	160° F

REPEATABILITY: Flowmeter repeatability is the ability of a meter to reproduce a measurement under similar conditions. This is not by itself a measure of accuracy, but rather a component of the meter's total accuracy. McCrometer propeller meters have a repeatability of ±0.25%.

PRESSURE: The pressure rating for standard propeller meters is 150 PSI. This pressure rating refers to the constant line pressure in the pipe. Some models can be rated up to 300 PSI. Higher pressures are available on special request.

TEMPERATURE: The temperature rating for standard propeller meters is 160° F constant temperature. This temperature rating refers to fluid temperature. Most standard models can be upgraded to 180° F constant temperature on special request.

2.2 HOW TO READ A TOTALIZER

The following guidelines should be helpful for reading totalizers on Mc Propeller flowmeters:

Most totalizers have "multipliers". Multipliers are always a multiple or fraction of ten which are used to multiply the direct reading of the totalizer. For example, an eight inch meter that totalizes in gallons will have a multiplier of times 100, see Figure 2. That means that the last digit on the right of the six digit totalizer is not gallons, but hundreds of gallons. In this example, the correct reading is 500 gallons.

The same eight inch meter totalizing in acre feet will have a multiplier of 0.001, see Figure 3. In this case, "X .001" is printed below the totalizer. The three digit counters on the right side are colored yellow to indicate a decimal point should be placed between the third and fourth digit when reading the totalizer. In this example, the correct reading is 092.545 Acre Feet. When reading a totalizer care must be taken to add the correct amount of zeroes or place the decimal point in the right place. If a mistake is made, the meter reading can be off by a factor of 10, 100, or even 1000 units.

Figure 2: Totalizer In Gallons

Figure 3: Totalizer In Acre Feet

2.3 UNDERSTANDING THE REGISTER GEAR RATIO

Each register has a gear ratio that is matched to the propeller. For instance, consider an 8" McCrometer meter totalizing in gallons. A standard 8" meter will have a gear ratio of 400:1, which means the propeller must rotate 400 times for the first odometer wheel to turn one complete revolution. This first odometer wheel usually symbolizes a certain multiple of the totalizing units, called a multiplier. Since the totalizer on the 8" meter has a multiplier of times 100 (signified by two zeros to the right of the odometer wheels), each number on the first odometer wheel represents one hundred gallons. Therefore, one complete rotation of the first odometer wheel is ten times one hundred gallons, or 1000 gallons. So remembering the gear ratio for this example is 400 propeller revolutions to one full turn of the odometer wheel, 400 propeller revolutions equals 1000 gallons.

Example: Standard 8" meter: 400 propeller rev. = 1 rev. of odometer wheel = 1000 gallons

***NOTE* Each line size has its own gear ratio. Registers from different size meters cannot be interchanged freely.** Be sure you know your meter's gear ratio and multiplier for reference.

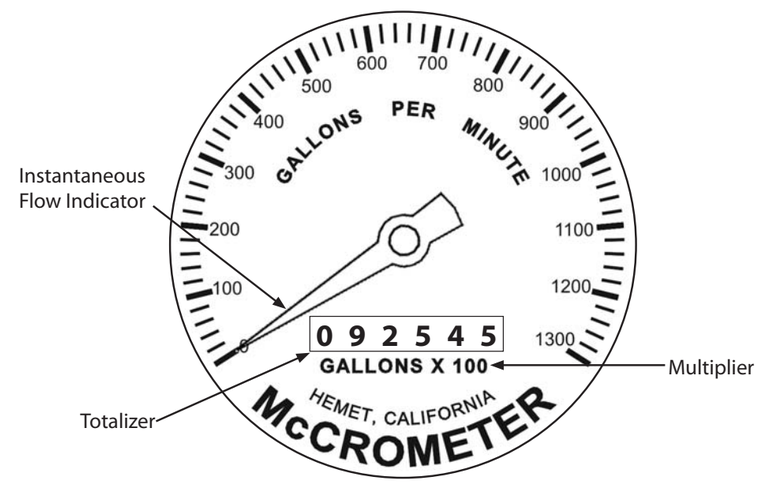

Figure: 4 Typical Dial Face

2.4 ACCURACY

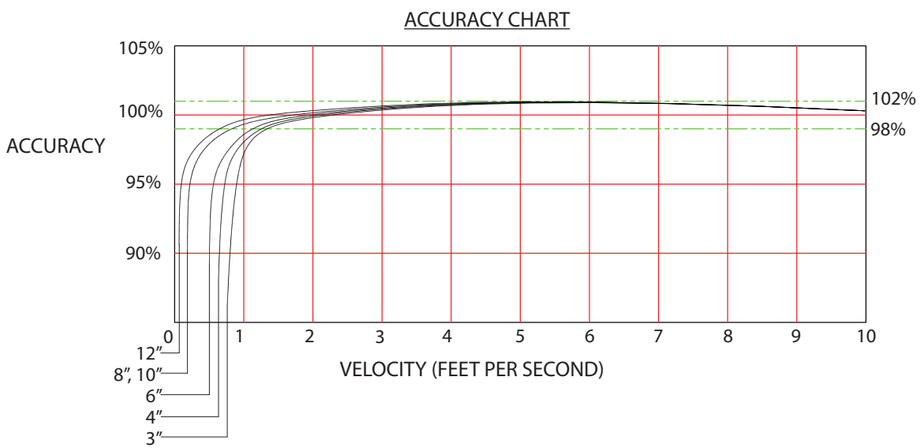

Standard flowrates for McCrometer propeller meters are shown below. Readings are guaranteed accurate within ±2% in these flowrates. Please note that over 80 percent of the meter's flow range, the accuracy is better than ±1%.

Nominal Meter Size	2"	2.5"	3"	4"	6"	8"	10"	12"	14"	16"	18"	20"	24"
Minimum Flow(U.S.GPM)	40	40	40	50	90	100	125	150	250	275	400	475	700
Maximum Flow(U.S.GPM)	250	250	250	600	1200	1500	1800	2500	3000	4000	5000	6000	8500
Dial Face Range	250	250	250	800	1300	2500	3000	4000	6000	8000	10000	10000	15000

2.5 HEADLOSS

Headloss refers to the fluid pressure lost due to the meter. Propeller meters have very low permanent headloss as seen in the chart below.

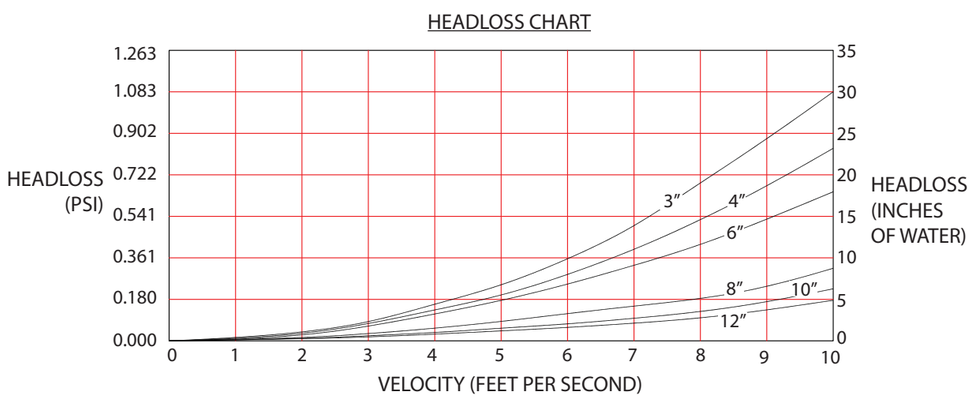

Nominal Meter Size	3"	4"	6"	8"	10"	12"	14"	16"	18"	20"	24"
Max. Headloss (in. H_20 column)	30	23	17	7	4	3	2	2	2	1	1

3.0 INSTALLATION INSTRUCTIONS

Proper meter installation is the first step to ensure excellent meter performance. Follow these instructions closely. Consult an authorized service representative or the factory for any circumstances encountered which are not covered in this manual.

All McCrometer products are tested and inspected during manufacture and prior to shipping. An inspection should be performed at the time of unpacking to detect any damage that might have occurred during shipment.

3.1 SAFETY

- Any person installing, inspecting, or maintaining a McCrometer flowmeter should have a working understanding of piping configurations and systems under pressure.
- Before adjusting or removing any meter, be certain the system has depressurized completely.

⚠ **NEVER ATTEMPT TO REMOVE A METER WHILE THE LINE IS UNDER PRESSURE!**

- Be careful when lifting meters. Meters can cause serious injury if lifted incorrectly or dropped.
- Only necessary and appropriate tools should be used when working on a meter. For tools list see page 11.
- Before starting a system, make sure all connections are properly secured. Keep a safe and prudent distance away from the meter during system start-up.

3.2 STRAIGHTENING VANES

Special attention should be given to systems using two elbows "out of plane" or devices such as a centrifugal sand separator. These cause swirling flow in the line that affect propeller meters. Well developed swirls can travel up to 100 diameters downstream if unobstructed. Since most installations have less than 100 diameters to work with, straightening vanes become necessary to alleviate the problem. Straightening vanes will break up most swirls and ensure more accurate measurement. McCrometer's mainline meters like the MW500 series have vanes included as a standard feature. If your model does not have straightening vanes (e.g., M0300 Bolt-On Saddle series), McCrometer actively encourages installing vanes just ahead of the meter. Straightening vanes are available in weld-in, bolt-in, and the FS100 Flow Straightener. For more information on vane installation, please visit www.mccrometer.com and download the following McCrometer documents:

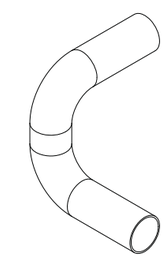

Figure: 6 Elbows Out Of Plane

- 24510-72 Installation Instructions For Bolt-In Vanes
- 24517-03 FS100 Flow Straightener Installation Instructions

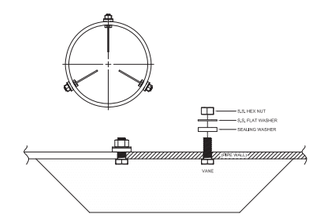

Figure: 7 Bolt In Straightening Vanes

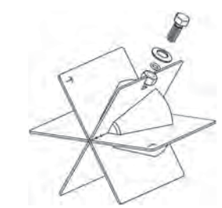

Figure: 8 FS100 Flow Straightener

3.3 OTHER INSTALLATION CONSIDERATIONS

- All propeller flowmeters are calibrated for a full pipeline only; if less, the flowmeter will over register the flow. Although a minimum line pressure is not necessary for an accurate measurement, a full pipe is necessary.
- Mc Propeller flowmeters can be mounted either horizontally or vertically. Mc Propeller flowmeters are calibrated for horizontal installation. Vertical mounting can offer some slight advantages due to gravity having a more pronounced flow conditioning effect in vertical lines. If the meter is to be mounted vertically, please notify the factory at time of order as the mechanical indicator needs to be calibrated for vertical installations.
- With the meter installed, check the rate-of-flow indicator. It should be stable to the point that it can be easily read. Some indicator movement is normal due to variations in flow. Erratic movement of the indicator is normally caused by flow variations and the system should be checked. Drastic variations in flow can decrease meter accuracy. If you suspect a problem with the meter, please contact your local McCrometer representative.

3.4 PIPE RUN REQUIREMENTS

Flowmeters are velocity sensing devices and are vulnerable to certain upstream disturbances. Because of this, meters need certain lengths of straight pipe runs before and after the meter. These distances usually relate to the diameter of the pipe used. Obstructions can include elbows, valves, pumps, and changes in pipe diameter. The uneven flow created by these obstructions can vary with each system. If your application provides for more than five diameters of upstream run, use the available distance.

- Upstream Requirement: Mc Propeller meters should be installed a minimum of five to ten diameters upstream of any obstructions. See the tables below. The exact upstream piping requirements are specific to the meter model number.
- Downstream Requirement: The downstream run should be one to two diameters of straight pipe length after the meter.

For upstream and downstream piping requirements relating to your specific meter, contact your local McCrometer representative. (Please be prepared to provide the serial number of your meter.)

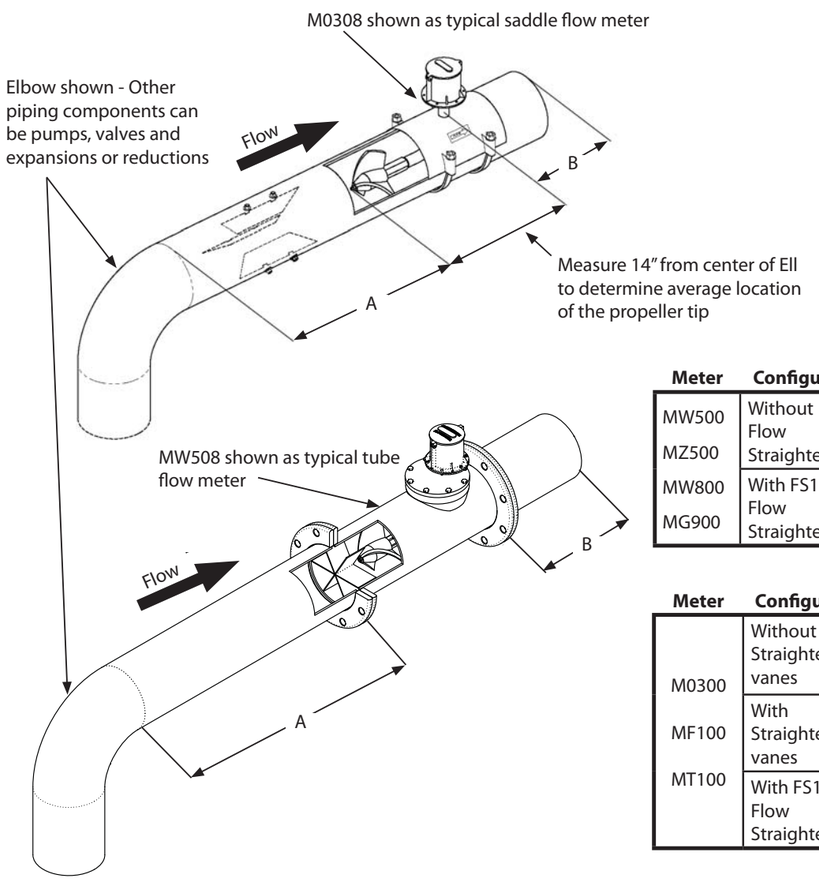

Meter	Configuration	A	B
MW500 MZ500	Without Flow Straightener	5	1
MW800 MG900	With FS100 Flow Straightener	1.5	1

Meter	Configuration	A	B
M0300 MF100 MT100	Without Straightening vanes	10	1
	With Straightening vanes	5	1
	With FS100 Flow Straightener	1.5	1

Figure: 5 Pipe Run Requirements For Saddle And Tube Style Flow Meters

3.5 FLOW DIRECTION

All McPropeller meters have a Flow Arrow displayed on the meter in an obvious location to indicate the direction of the fluid flow. This is to insure that a meter is not installed backwards.

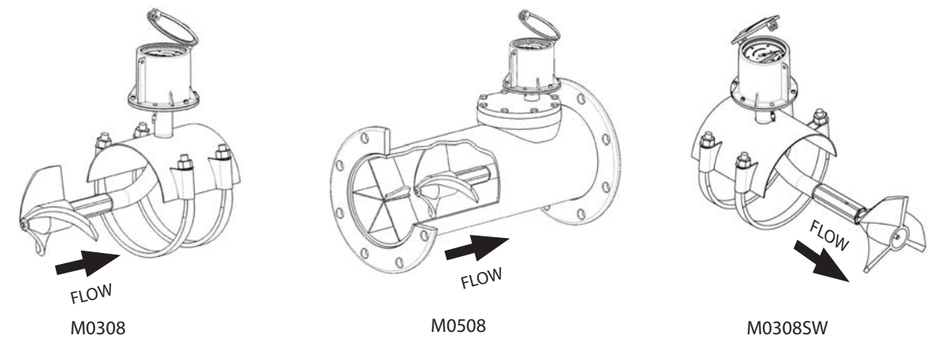

Figure: 9 McPropeller Meters With Indication Of Flow Direction

Special attention should be given to the installation direction of the Surface Water (SW) models of Mc Propeller meters, i.e. M0308SW. The M0300SW model meter is designed with the meter body turned 180 degrees from normal, a propeller installed nose-first on the bearing shaft, and a reverse flow style bearing assembly. This configuration allows the ell to curve with the flow, allowing grass or other debris to shed off with ease. Therefore, the proper installation of the M0300SW model meter appears "backwards".

4.0 METER CONSTRUCTION

Every Mc Propeller Meter is constructed and assembled at the McCrometer factory. The Mc Propeller Meter design been refined and improved over past thirty years. Quality assurance at each step of the production process ensures every meter to be accurate and reliable for years of service.

4.1 COMMON PARTS

Mc Propeller Meters have a simple design with a limited number of moving parts. Figure 10 shows labeled parts that are commonly shared among models. These components are described in detail on the following pages.

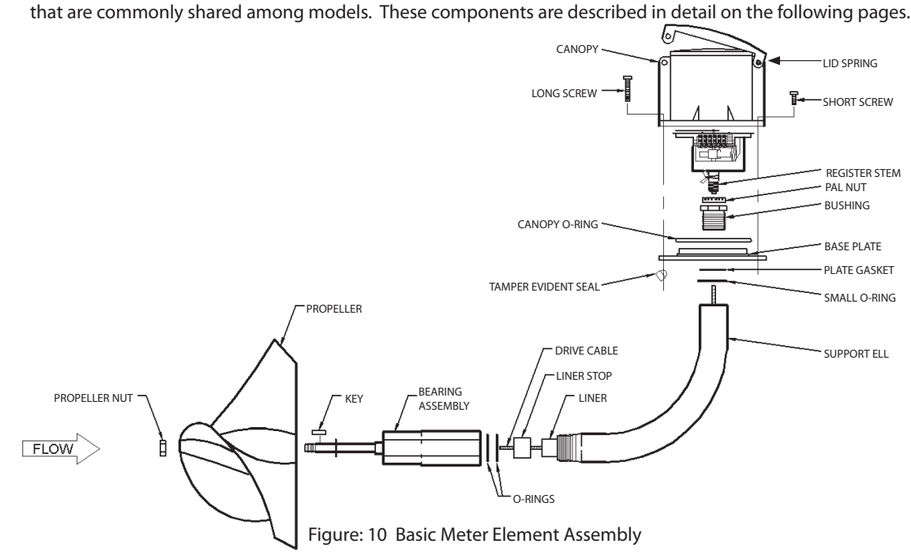

Figure: 10 Basic Meter Element Assembly

4.2 PROPELLER

The propeller is, of course, a very important part of any propeller meter. Mc Propeller flowmeter propellers have the following characteristics that ensure accurate readings:

- Each propeller is wet calibrated in a NIST (National Institute of Standards and Technology) traceable laboratory and trimmed so that a standard ratio is achieved. This allows for easy parts replacement in the field without recalibration.
- Propellers have a curved shape called the helical lead. The helical lead governs the rotational speed for a given flow velocity.
- Propellers are as light as possible so that the momentum of the fluid is large in relation to the mass of the propeller. As a result, lower flows can be measured and changes in velocity can be detected more rapidly.
- The propeller is sufficiently rigid to retain its shape during high flow conditions throughout the life of the meter.
- Propellers are large in relationship to the line size. This is necessary to affect the whole flow, which both averages the velocity profile and reduces inaccuracy.
- The propeller covers and protects the bearings to reduce debris and other fluid particles from entering the bearing assembly.

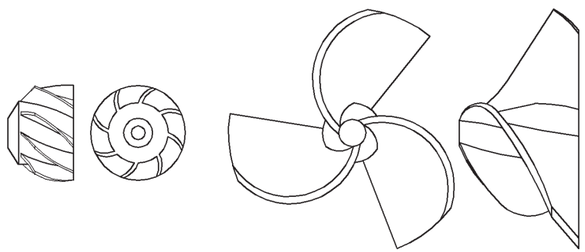

Figure: 11 Eight And Three Blade Propellers

4.3 BEARING ASSEMBLY

Two shielded stainless steel bearings support the propeller shaft and allow it to rotate freely. The propeller covers the bearings to help prevent loss of lubrication and entry of foreign particles found in the fluid. For higher than normal flows, a third over-run bearing can be added to the propeller shaft to increase the life of the meter.

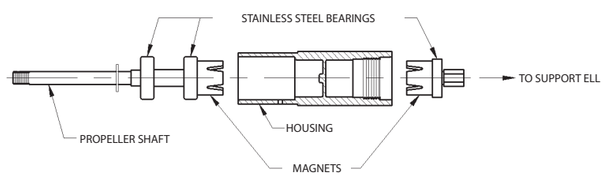

Note: The bearing assembly should not be disassembled.

Figure: 12 Bearing Assembly

The bearing assembly housing prevents the process fluid from entering the drive assembly. The housing is manufactured with an integral diaphragm separating the fore and aft sections. Two permanent magnets on either side of the diaphragm transmit the rotation of the propeller through the diaphragm, while preventing fluid from entering the aft chamber. This magnetic drive makes an excellent and frictionless seal. This connection also allows the magnets to slip if a sudden surge hits the propeller. This slippage protects the meterhead from excess torque. The bearing assembly threads onto the drive assembly support and seals with two O-rings. The bearing is designed with the UltraShield which prevents debirs from entering the bearing assembly.

4.4 DRIVE ASSEMBLY

The drive assembly supports the bearing assembly and propeller and transmits propeller revolutions to the meterhead. A heavy walled stainless steel pipe cold formed into an ell (90 degree) shape supports both the bearing assembly and the propeller. This ell holds a steel cable encased in a protective vinyl liner. The cable extends outside the liner to attach to the aft of the bearing assembly and the bottom of the meterhead to transmit the revolutions of the propeller to the register.

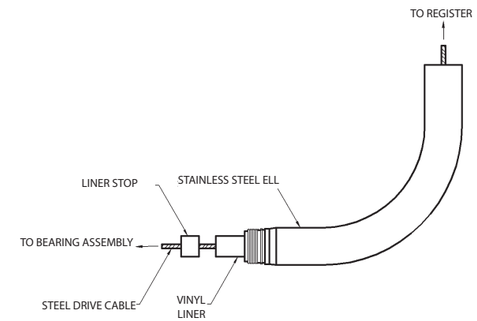

Figure: 13 Drive Assembly

4.5 METERHEAD

The meterhead consists of a register, canopy, and a base plate. The register transforms the speed of the propeller into both a totalizer and an instantaneous flow indicator. McCrometer's totalizers are six-digit, straight-reading type. Units of totalization include many standard units such as gallons, cubic feet, acre feet, and cubic meters.

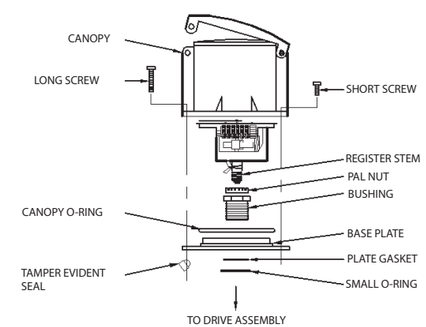

Figure: 14 Meterhead

The instantaneous flow indicator is of the mechanical magnetic cup design. Indicator units include gallons per minute, cubic feet per second, and liters per second, as well as many others. McCrometer offers this instantaneous flow indicator standard.

The entire register threads into a bushing which holds a die cast aluminum base plate to the ell where it connects with the drive cable. The base plate seals to the ell with an O-ring and gasket. A die cast aluminum canopy covers the register and attaches to the base plate with six screws. A stamped tamper evident seal attached to one of these screws ensures that the instrumentation of the register remains unaltered.

4.6 REGISTER EXTENSION

The L0780 Register Extension provides a means for relocating a McCrometer Propeller Flow Meter register to a height that improves access and protection of the register.

The L0780 Register Extension extends the register up from the top of the flow meter to a maximum height of 120′. The extension pipe material is 1″ Schedule 80, 304 stainless steel. The extension is provided as a kit, including drive cable and sealing hardware. All Mc Propeller flow meters can utilize the extension. The existing meter base plate, register and register canopy are reused.

Meter performance is typically unaffected by the addition of a register extension. Long extensions on small flow meters may require a higher minimum flow rate to operate properly. Maximum flow rates are unaffected. All other aspects of meter performance are unchanged by the extension. The stainless steel construction provides corrosion resistance and requires little maintenance once installed. The meter environmental protection rating of NEMA 4X is retained when the installation is properly installed and maintained.

Applications that would benefit from the installation of the L0780 Register Extension are:

- Flow meter locations subjected to temporary local flooding or washdown.
- Pits and other meter locations considered enclosed spaces.
- Meters installed below walkway level.
- Meters configured for higher than normal fluid temperatures.
- Electronic meters with digital registers or pulse transmitters can also use the extension for meter mounted or remote models.

The L0780 Register Extension is always mounted vertically on horizontally installed flow meters (see figure below). Meters subjected to pipe vibration should include appropriate anchoring of longer extensions. In areas with limited clearance over the meter, the overall height, including an open canopy lid, should be considered. Orientation of the register for easy viewing is accomplished when installing the register base plate after the extension is secured in place.

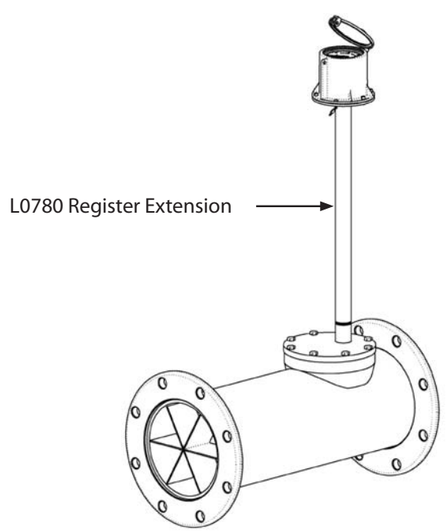

Figure: 15 L0780 Register Extension

5.0 MAINTENANCE AND TROUBLESHOOTING

McCrometer Inc. manufactures propeller meters to be as trouble free as possible. The first criterion in a successful meter application is that the meter is installed correctly. Please refer to the earlier Installation Instructions or call an authorized service representative or the factory to answer any questions.

5.1 OCCASIONAL INSPECTIONS

Mc Propeller Meters commonly operate for years with little or no routine maintenance. Occasional inspections should be conducted to listen and look for signs of mechanical wear and breakage, such as:

- Mc Propeller flowmeters operate very quietly. Any grinding or growling noises that can be detected are the first signs that mechanical failure is near.

- Visual cues are also valuable indicators. A once steady rate-of-flow indicator that has become erratic is usually indicative of something beginning to fail. Fogging visible through the lens would suggest a leak, either from the bearing assembly, or from an external seal.

- If there is doubt whether your rate of flow indicator is properly functioning, perform this simple test. Bring the flow through the meter to a relatively high, steady rate. Time a specific increment of the totalizer wheel. Each meter will require different but simple calculations to determine if your rate of flow indicator agrees with your totalizer. For assistance with this test, contact your local McCrometer representative or the factory.

5.2 TOOLS LIST

The following list includes tools needed to service and maintain Mc Propeller meters:

- Open or box end wrenches for top plate bolts (these vary with line size):

1/2″	for 2″, 2 1/2″, and 3″ line sizes
9/16″	for 4″, 6″, and 8″ line sizes
3/4″	for 10″ and 12″ line sizes

- Open or box end wrenches in the following sizes:

9/16″	for propeller nut
1 3/8″	for bearing assembly
15/16″	for register pal nut

- 1 3/8″ Deep Socket
- Standard, flat screwdriver with 6″ reach for canopy screws
- Wire cutters for removing tamper evident seal
- Hammer
- Small wire brush for cleaning threads
- Clean cloth
- Loctite (Arontite Stock CE-805-Color Blue is suggested)
- Light machine oil

5.3 DISASSEMBLY AND INSPECTION PROCEDURE

1. REMOVE THE METER OR ELEMENT. Depending on the model, remove the entire meter or the metering element (propeller, bearing and drive assemblies, and meterhead) to access the propeller and bearing assembly.

WARNING: Do not remove the meter or top plate while the line is under pressure!

2. CHECK THE PROPELLER. Check the propeller for broken or damaged blades or foreign material hanging from it. Careful examination should be made of the propeller's trailing edge for damage. Some small nicks and abrasions to the leading edge of the blades are common and will not affect the accuracy of the meter. Mc Propeller's propeller blades are thick, resulting in a strong, stiff blade that does not change shape under normal operations.

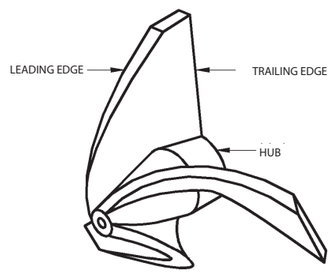

The leading edge of the propeller can have small nicks and abbrasions without sacrificing accuracy. The trailing edge must be clean.

Figure: 16 Propeller Elements

3. CHECK THE BEARINGS. Check the condition of the bearings by grasping the propeller and trying to move it up and down and sideways. If the propeller has any amount of "play," then the bearing assembly should be replaced.

4. REMOVE THE PROPELLER. Remove the propeller by unscrewing the nut on the end of the propeller with a 9/16" wrench. Pull the propeller off the end of the bearing assembly shaft. Watch for the key, it may remain on the shaft, on the propeller, or fall free. If the propeller will not come off by hand, lightly tap the hub of the propeller with a hammer. Tap only the hub, since striking the trailing edge of the propeller blade may change the calibration of the meter. One or more stainless steel washers may be on the shaft. Leave these in place.

5. REMOVE THE BEARING ASSEMBLY. Remove the bearing assembly by unscrewing it with a 1 3/8" wrench. The drive cable may come out at this time. Set it aside for now. A deep 1-3/8" socket will be required for meters with fixed ells. After removing the bearing assembly, hold the shaft and spin the bearing housing. It should spin freely and smoothly. If it does not, it should be replaced.

6. CHECK. Check for damaged threads and clean the O-ring grooves.

7. REMOVE THE DRIVE CABLE. Now pull the drive cable out of the ell and inspect it for moisture, rust, wear, cracks, or breaks. If a cable appears worn, this is usually a symptom of another problem, such as moisture.

8. REMOVE THE REGISTER CANOPY. Remove the register canopy by unscrewing the five short screws and the one long screw with the tamper evident seal from around the base. Inspect the canopy and the base plate for signs of leaks.

IMPORTANT: Removing the tamper evident seal from a meter that is still under warranty could void the factory warranty.

9. REMOVE THE REGISTER HEAD. Remove the register head by loosening the pal nut on the stem of the register with a 15/16" wrench. Unscrew the whole register unit. Inspect the register for moisture. Look for a white chalky substance on the frame of the register that shows the register was wet. Turn the very bottom of the register stem several times. The register movement should turn freely. The first odometer wheel also should turn. If not, the register should be returned for repair or exchange. The purpose of the silica gel dry pack is to absorb moisture trapped during assembly. Replace the silica pack.

10. REMOVE THE CABLE LINER. If moisture exists inside the drive assembly, the liner should be taken out to dry. To remove the liner, use an item such as a large bolt to tap the liner down from the top. Tap enough to push the liner stop out from the bottom to allow the liner to be pulled free.

5.4 ORDERING REPLACEMENT PARTS

When ordering replacement parts, the meter's serial number is needed to ensure correct replacements. The serial number can be found on the register canopy lid. The number sequence should look similar to: 94-789-8. The first two digits are the year of manufacture, the second set of digits is the number of the meter, and the last set of digits is nominal line size. For meters manufactured before 1994, the last sets of digits are reversed. For specific meter part numbers, see the drawings of each meter type at the back of this Manual.

5.5 REASSEMBLY PROCEDURE

With the problem found and the correct replacement parts collected, the meter must be correctly reassembled to ensure trouble-free service in the future.

1. CLEAN ALL PARTS. As with any mechanical device, all of the parts that are going to be reused must be clean and free of dust and dirt. Take some time and make sure these parts are ready to be used.

2. REPLACE THE CABLE LINER. If the cable liner was removed, replace it now. Push the cable liner into the ell from the bottom up to the base plate. Replace the liner stop.

3. CLEAN THE LINER. Blow out any dirt that may be trapped inside the liner.

4. REPLACE THE BEARING ASSEMBLY. With a drop of light machine oil on your finger, lubricate the small o-rings on the end of the threaded ell. (Do not get oil on the threads of ell.) Place two drops of Loctite on the threads of the ell. Thread the bearing assembly on the ell and tighten with a wrench or a special bearing tool. Be careful not to cross thread the assembly and only snug the bearing assembly with the wrench. Extra care should be exercised in assuring that the parts are clean and the o-rings have a good sealing area.

5. REPLACE THE PROPELLER. Make sure the washers on the propeller shaft are in place. Slide the propeller over the shaft. Align the shaft and propeller keyways and insert the key. You may need to use a screw driver to push the key to the fully engaged position. Apply a small amount of Loctite to the threads of the nut and tighten to a good snug fit, but not as tight as possible.

IMPORTANT: Use only two drops of Loctite. Too much Loctite can cause the aft bearing to seize.

6. REPLACE THE DRIVE CABLE. With a clean cloth, wipe off any dirt or dust from the drive cable. Apply a small amount of light machine oil to the cable and insert it all the way into the ell. To engage the cable, slowly turn the propeller as you gently push on the cable. After you are satisfied that the cable is in the bearing assembly as far as possible, check the height of the cable in relationship to the top of the mounting plate bushing. The cable should be within 1/4 of an inch (plus or minus) from the top of the bushing. If not, it is the wrong cable or the cable is not fully seated into the bearing assembly.

7. REPLACE THE REGISTER HEAD. Thread the pal nut, with the open face up, onto the stem on the bottom of the register. The nut should be at least halfway up the threads. Place the register stem on the drive cable and screw it into the mounting plate bushing. The register should be screwed down far enough that the cable is well into the register stem, but not far enough to bind the cable. Face the register the desired direction and tighten the pal nut to lock the register into position.

8. CHECK. Spin the propeller to check that the rate of flow indicator and totalizer are engaged. Listen for any clicking or grinding noises. The meter should turn quietly.

9. REPLACE THE REGISTER CANOPY. Install the large o-ring and flat gasket onto the base plate. Use a small amount of light oil to lubricate the o-ring and place the register canopy down over it. Push down until the o-ring bottoms out against the base plate. Replace the six screws and lightly snug them.

10. RE-INSTALL THE FLOWMETER. Re-install the flowmeter. Before pressurizing the system, make sure all connections are properly secured. As an obvious general safety consideration, maintain a safe and prudent distance from the meter when the system is to be started. After the system restarts, the indicator should be smooth and the meter quiet.

6.0 TECHNICAL SPECIFICATIONS

ACCURACY/REPEATABILITY: ±2% of reading guaranteed throughout full range; ±1% over reduced range;
Repeatability 0.25% or better

MAXIMUM TEMPERATURE: (Standard Construction) 160°F constant

PRESSURE RATING: 150 psi

MATERIALS:

BEARING ASSEMBLY:
Impeller shaft is 316 stainless steel.
Ball bearings are 440C stainless steel.
MAGNETS: (Permanent type) Cast or sintered Alnico
BEARING HOUSING: Brass; Stainless Steel optional
SADDLE: 304 stainless steel construction

REGISTER: An instantaneous flowrate indicator and six-digit straight-reading totalizer are standard.
The register is hermetically sealed within a die cast aluminum case. This protective housing includes a domed acrylic lens and hinged lens cover with locking hasp.
IMPELLER: Impellers are manufactured of high-impact plastic, retaining their shape and accuracy over the life of the meter. High temperature impeller is optional.

OPTIONS

- Saddle can be constructed to fit any outside diameter pipe dimensions, including metric sizes
- Can be used on a variety of pipe materials such as steel, plastic, cast iron, cement or asbestos cement
- Register extension
- All stainless steel bearing assembly
- High temperature construction
- Marathon bearing assembly for higher than normal flowrates
- FlowCom Electronic Register
- A complete line of flow recording / control instrumentation including transmitters and flow computers
- Blank repair saddle
- Vanes
- Flow straighteners
- Canopy Boot
- Lid spri

TECHNICAL SUPPORT

For technical assistance, please contact your authorized service representative or the factory at:

McCrometer Inc.
3255 W. Stetson Avenue
Hemet, CA 92545

PHONE: (951) 652-6811 FAX: (951) 652-3078

Hours: 8 a.m. - 4 p.m. PT, Mon-Fri

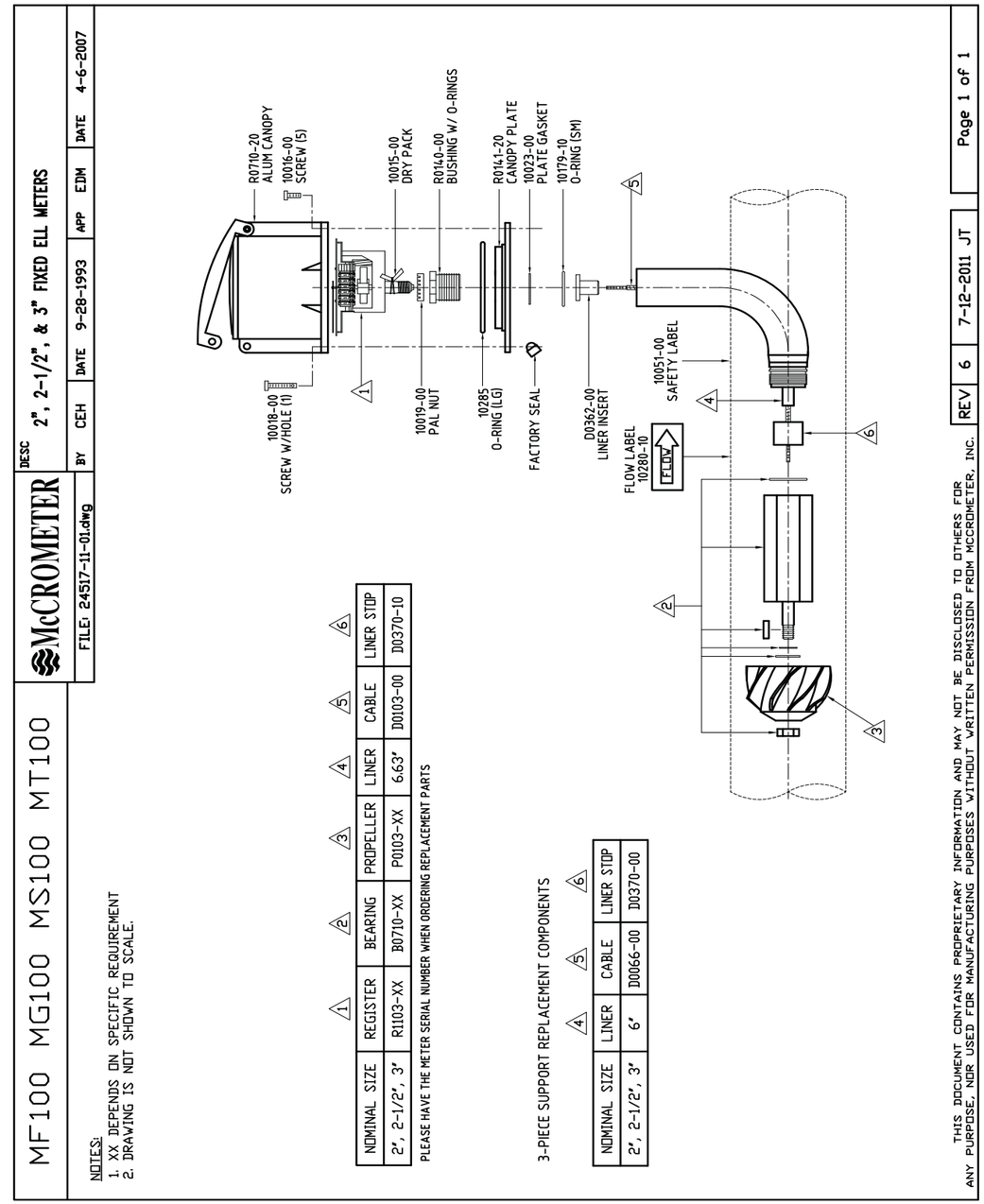

MF100 MZ100 MZ200 MG100 MS100 MT104 MT106

McCROMETER

FILE: 24517-11-02.dwg

DESC: 4" THRU 24" FIXED ELL METERS

BY	CEH	DATE	9-24-1993	APP	EDM	DATE	4-9-2007

NOTES:
1. XX DEPENDS ON SPECIFIC REQUIREMENT
2. DRAWING IS NOT SHOWN TO SCALE.

MG100 MS100 MT104 & MT106

SIZE	REGISTER (1)	BEARING (2)	PROPELLER (3)	LINER (4)	CABLE (5)
4"	R1104-XX	B0610-XX	P0104-XX	D0304-00	D0104-00
6"	R1106-XX	B0110-XX	P0106-XX	D0304-00	D0104-00
8"	R1108-XX	B0110-XX	P0108-XX	D0304-00	D0104-00
10"	R1110-XX	B0110-XX	P0110-XX	D0303-00	D0122-00
12"	R1112-XX	B0110-XX	P0112-XX	D0305-00	D0105-00
14"	R1114-XX	B0110-XX	P0112-XX	D0313-00	D0123-00
16"	R1116-XX	B0110-XX	P0112-XX	D0306-00	D0106-00
18"	R1118-XX	B1510-XX	P0116-XX	D0307-00	D0107-00
20"	R1120-XX	B1510-XX	P0116-XX	D0307-00	D0107-00
24"	R1124-XX	B1510-XX	P0116-XX	D0308-00	D0108-00

PLEASE HAVE THE METER SERIAL NUMBER WHEN ORDERING REPLACEMENT PARTS

MF100 MZ100 MZ200

SIZE	LINER (4)	CABLE (5)
4"	D0304-00	D0104-00
6"	D0304-00	D0104-00
8"	D0304-00	D0104-00
10"	D0306-00	D0106-00
12"	D0306-00	D0106-00
14"	D0307-00	D0107-00
16"	D0307-00	D0107-00
18"	D0307-00	D0107-00

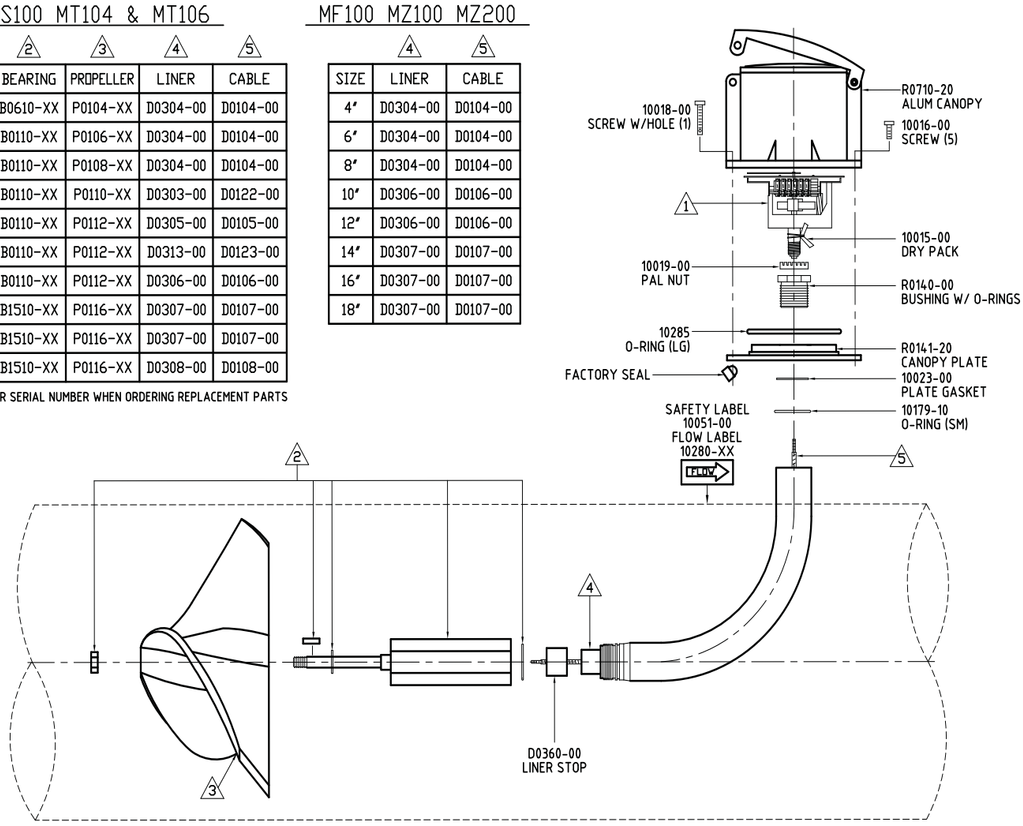

THIS DOCUMENT CONTAINS PROPRIETARY INFORMATION AND MAY NOT BE DISCLOSED TO OTHERS FOR ANY PURPOSE, NOR USED FOR MANUFACTURING PURPOSES WITHOUT WRITTEN PERMISSION FROM MCCROMETER, INC.

REV	6	7-12-2011 JT

ML100

McCROMETER

FILE: 24517-11-03.dwg

DESC: 4" THRU 24" FIXED ELL FLANGED IRRIGATION METERS

BY	CEH	DATE	9-27-1993	APP	EDM	DATE	4-6-2007

NOTES:
1. XX DEPENDS ON SPECIFIC REQUIREMENT
2. DRAWING IS NOT SHOWN TO SCALE.

SIZE	REGISTER (1)	BEARING (2)	PROPELLER (3)	LINER (4)	CABLE (5)
6"	R1106-XX	B0110-XX	P0106-XX	D0304-00	D0104-00
8"	R1108-XX	B0110-XX	P0108-XX	D0304-00	D0104-00
10"	R1110-XX	B0110-XX	P0110-XX	D0303-00	D0122-00
12"	R1112-XX	B0110-XX	P0112-XX	D0305-00	D0105-00

PLEASE HAVE THE METER SERIAL NUMBER WHEN ORDERING REPLACEMENT PARTS

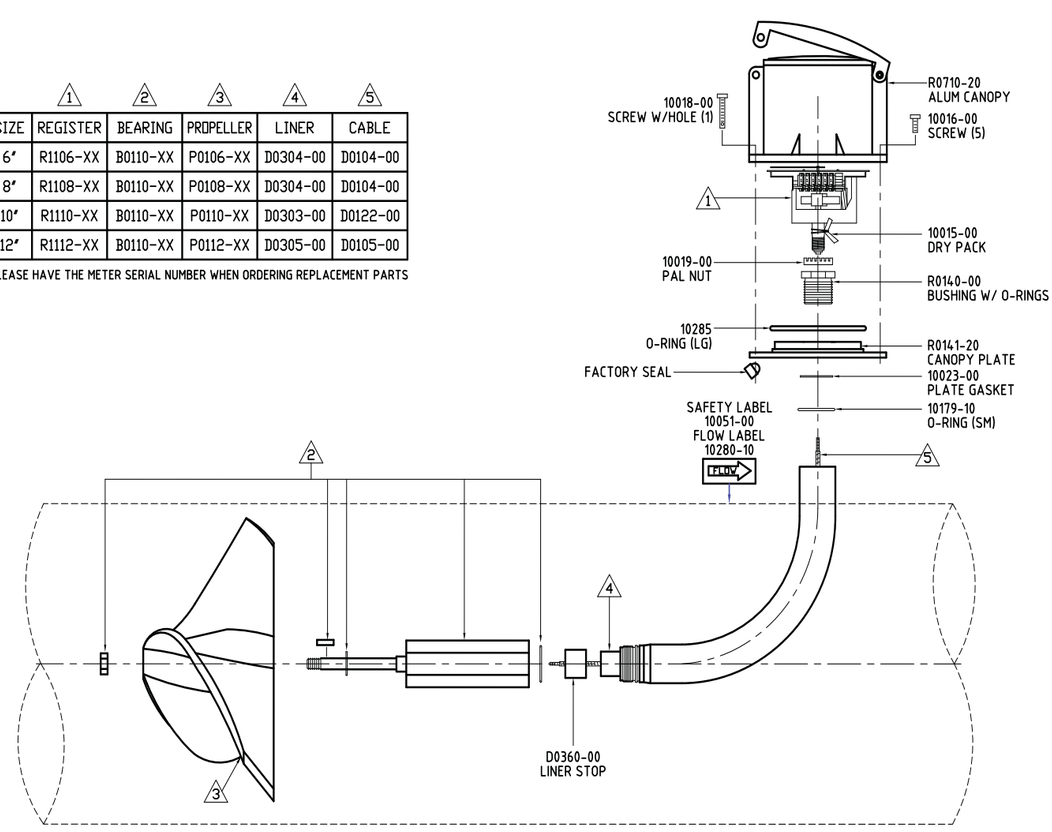

THIS DOCUMENT CONTAINS PROPRIETARY INFORMATION AND MAY NOT BE DISCLOSED TO OTHERS FOR ANY PURPOSE, NOR USED FOR MANUFACTURING PURPOSES WITHOUT WRITTEN PERMISSION FROM MCCROMETER, INC.

REV	4	7-12-2011 JT

M0300

McCROMETER

DESC: 6" THRU 16" BOLT ON SADDLE METERS

FILE: MAN M0300 | BY CEH | DATE 9-23-1993 | APP EDM | DATE 4-6-2007

NOTES:
1. XX DEPENDS ON SPECIFIC REQUIREMENT
2. DRAWING IS NOT SHOWN TO SCALE.

MODEL	REGISTER (1)	BEARING (2)	PROPELLER (3)	LINER (4)	CABLE (5)	U-BOLT/STRAP (6)	GASKET (7)	TEMPLATE
M0306	R1106-XX	B0110-XX	P0106-XX	D0304-00	D0104-00	T0756-00 (2)	T0384-10	10112-03
M0308	R1108-XX	B0110-XX	P0108-XX	D0304-00	D0104-00	T0758-00 (2)	T0384-10	10112-05
M0310	R1110-XX	B0110-XX	P0110-XX	D0303-00	D0122-00	T0760-00 (2)	T0384-11	10112-07
M0312	R1112-XX	B0110-XX	P0112-XX	D0305-00	D0105-00	T0762-00 (2)	T0384-11	10112-09
M0314	R1114-XX	B0110-XX	P0112-XX	D0313-00	D0123-00	T0745-02 (2)	T0384-11	10112-09
M0316	R1116-XX	B0110-XX	P0112-XX	D0313-00	D0123-00	T0740-00 (2)	T0384-11	10112-09

PLEASE HAVE THE METER SERIAL NUMBER WHEN ORDERING REPLACEMENT PARTS

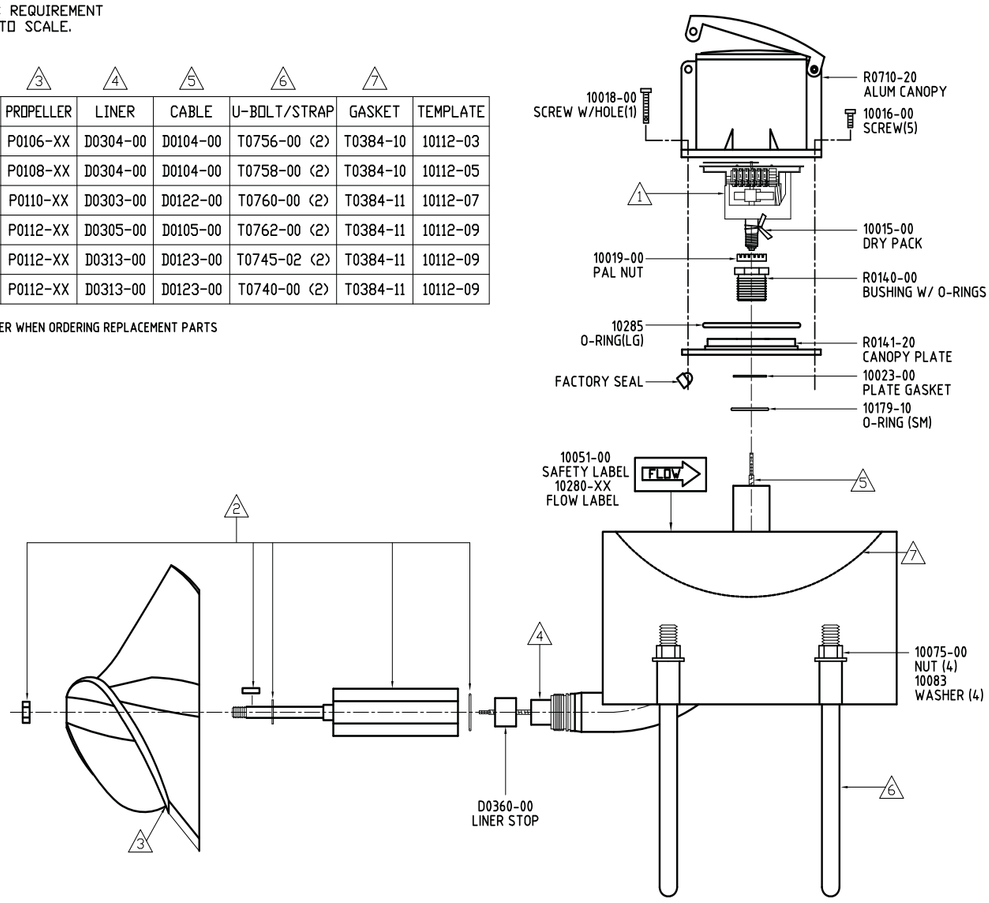

THIS DOCUMENT CONTAINS PROPRIETARY INFORMATION AND MAY NOT BE DISCLOSED TO OTHERS FOR ANY PURPOSE, NOR USED FOR MANUFACTURING PURPOSES WITHOUT WRITTEN PERMISSION FROM MCCROMETER, INC.

REV 7 | 7-12-2011 JT

M0300SW

McCROMETER

DESC: 6" THRU 12" BOLT ON SADDLE METERS

FILE: 24517-11-04.dwg | BY MPG | DATE 8-18-2008 | APP JC | DATE 8-18-2008

NOTES:
1. XX DEPENDS ON SPECIFIC REQUIREMENT
2. DRAWING IS NOT SHOWN TO SCALE.

MODEL	REGISTER (1)	BEARING (2)	PROPELLER (3)	LINER (4)	CABLE (5)	U-BOLT (6)	GASKET (7)	TEMPLATE
M0306SW	R1106-XX	B0110-XX	P0136-02	10"	D0104-00	T0756-00 (2)	T0384-10	10112-03
M0308SW	R1108-XX	B0110-XX	P0136-02	10"	D0104-00	T0758-00 (2)	T0384-10	10112-05
M0310SW	R1110-XX	B0110-XX	P0136-02	11"	D0122-00	T0760-00 (2)	T0384-11	10112-07
M0312SW	R1112-XX	B0110-XX	P0136-02	12"	D0105-00	T0762-00 (2)	T0384-11	10112-09

PLEASE HAVE THE METER SERIAL NUMBER WHEN ORDERING REPLACEMENT PARTS

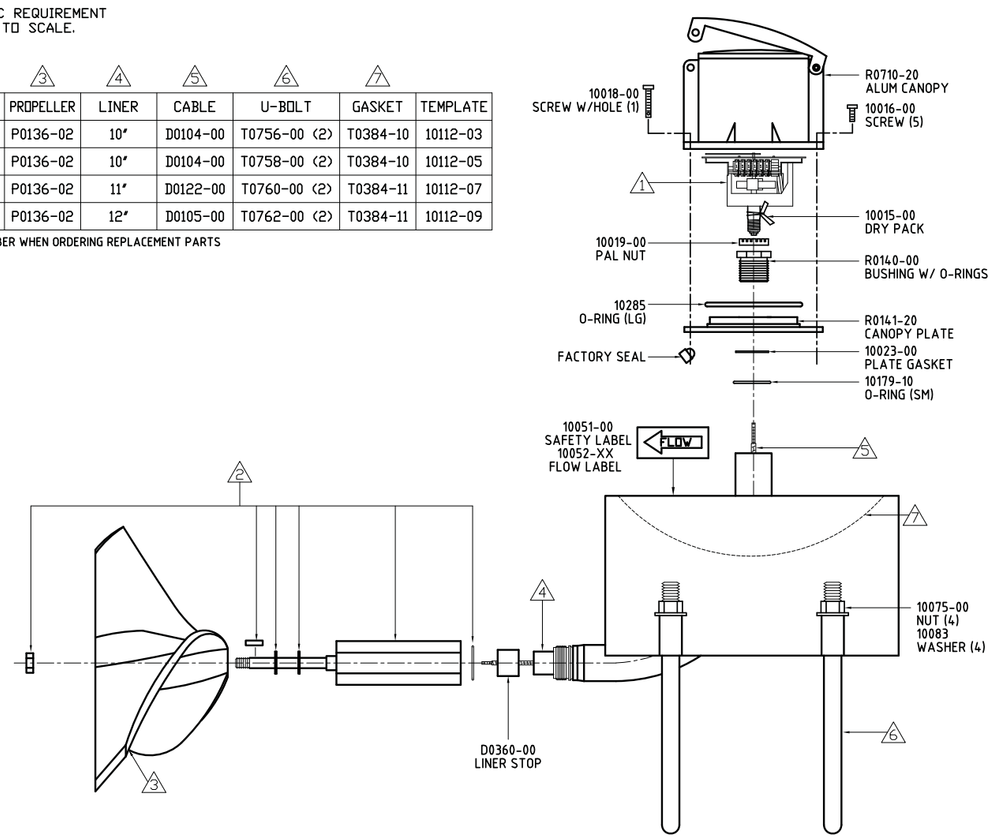

THIS DOCUMENT CONTAINS PROPRIETARY INFORMATION AND MAY NOT BE DISCLOSED TO OTHERS FOR ANY PURPOSE, NOR USED FOR MANUFACTURING PURPOSES WITHOUT WRITTEN PERMISSION FROM MCCROMETER, INC.

REV 2 | 8-05-2011 JT

M0304

McCROMETER

DESC: 4" BOLT ON SADDLE METERS

FILE: MAN M0304 | BY CEH | DATE 9-23-1993 | APP EDM | DATE 4-9-2007

NOTES:
1. XX DEPENDS ON SPECIFIC REQUIREMENT
2. DRAWING IS NOT SHOWN TO SCALE.

MODEL	REGISTER (1)	BEARING (2)	PROPELLER (3)	LINER (4)	CABLE (5)	LINER STOP (6)	U-BOLT (7)	GASKET (8)	TEMPLATE
M0	R1104-XX	B0610-XX	PT104-XX	6.75'	D0103-00	D0370-10	T0754-00 (2)	T0384-00	10112-01

PLEASE HAVE THE METER SERIAL NUMBER WHEN ORDERING REPLACEMENT PARTS

3-PIECE SUPPORT REPLACEMENT COMPONENTS

MODEL	LINER (4)	CABLE (5)	LINER STOP (6)
M0	5.31'	D0066-00	D0370-00

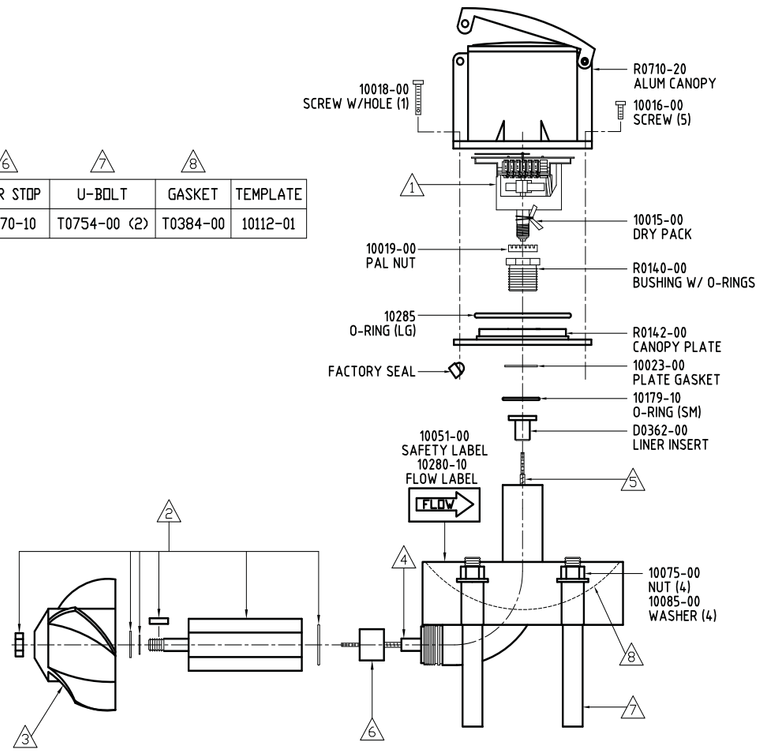

THIS DOCUMENT CONTAINS PROPRIETARY INFORMATION AND MAY NOT BE DISCLOSED TO OTHERS FOR ANY PURPOSE, NOR USED FOR MANUFACTURING PURPOSES WITHOUT WRITTEN PERMISSION FROM MCCROMETER, INC.

REV 6 | 7-12-2011 JT | Page 1 of 1

MW/QW500 MG900 MT900 MW900

McCROMETER

DESC: 2", 2-1/2", & 3" TOP PLATE METERS CS & S304

FILE: 24517-11-06.dwg | BY CEH | DATE 10-6-1993 | APP EDM | DATE 4-9-2007

NOTES:
1. XX DEPENDS ON SPECIFIC REQUIREMENT
2. DRAWING IS NOT SHOWN TO SCALE.

MODEL	REGISTER (1)	BEARING (2)	PROPELLER (3)	LINER (4)	CABLE (5)	LINER STOP (6)	ELL-ASSY (7)	BOLT (6) (8)	O-RING (9)
MW MG MT MW	R1103-XX	B0710-XX	P0103-XX	6.63'	D0103-00	D0370-10	L0202-00	10049-10	10240-00
QW500	R1103-XX	B0710-XX	P0203-XX	6.63'	D0103-00	D0370-10	L0202-00	10049-10	10240-00

PLEASE HAVE THE METER SERIAL NUMBER WHEN ORDERING REPLACEMENT PARTS

3-PIECE SUPPORT REPLACEMENT COMPONENTS - ALL MODELS

NOMINAL SIZE	LINER (4)	CABLE (5)	LINER STOP (6)	ELL-ASSY (7)
2', 2-1/2', 3'	6'	D0066-00	D0370-00	L0203-10

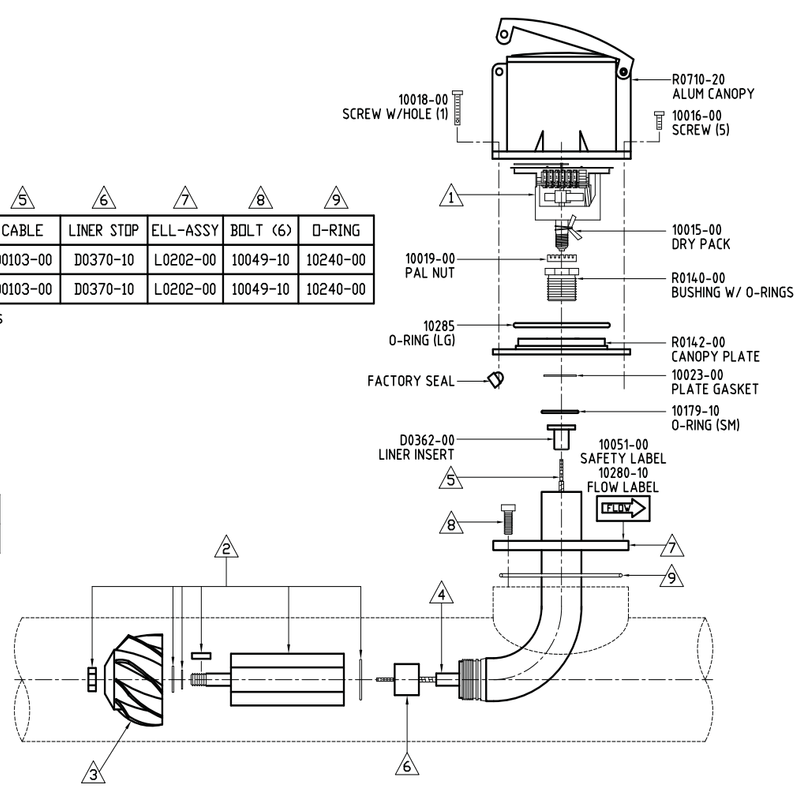

THIS DOCUMENT CONTAINS PROPRIETARY INFORMATION AND MAY NOT BE DISCLOSED TO OTHERS FOR ANY PURPOSE, NOR USED FOR MANUFACTURING PURPOSES WITHOUT WRITTEN PERMISSION FROM MCCROMETER, INC.

REV 5 | 7-12-2011 JT | Page 1 of 1

MW500 MW600 MG/MW900 MT904 MT906

McCROMETER

DESC: 4" THRU 24" TOP PLATE METERS

FILE: 24517-11-07.dwg | BY CEH | DATE 9-23-1993 | APP EDM | DATE 6-9-2007

NOTES:
1. XX DEPENDS ON SPECIFIC REQUIREMENT
2. DRAWING IS NOT SHOWN TO SCALE.

SIZE	REGISTER (1)	BEARING (2)	PROPELLER (3)	LINER (4)	CABLE (5)	ELL-ASSY (6)	BOLT (7)	O-RING (8)
4"	R1104-XX	B0610-XX	P0104-XX	D0304-00	D0104-00	LQ204-10	10103-00 (6)	T0390-00
6"	R1106-XX	B0110-XX	P0106-XX	D0304-00	D0104-00	L0205-10	10103-00 (8)	T0390-10
8"	R1108-XX	B0110-XX	P0108-XX	D0303-00	D0122-00	L0206-10	10103-00 (8)	T0390-10
10"	R1110-XX	B0110-XX	P0110-XX	D0313-00	D0123-00	L0207-10	10050-00 (12)	T0399-10
12"	R1112-XX	B0110-XX	P0112-XX	D0306-00	D0106-00	L0208-10	10050-00 (12)	T0399-10
14"	R1114-XX	B0110-XX	P0112-XX	D0306-00	D0106-00	L0209-10	10050-00 (12)	T0399-10
16"	R1116-XX	B0110-XX	P0112-XX	D0307-00	D0107-00	L0210-10	10050-00 (12)	T0399-10
18"	R1118-XX	B1510-XX	P0116-XX	D0307-00	D0107-00	L0211-10	10099-00 (16)	T0399-11
20"	R1120-XX	B1510-XX	P0116-XX	D0308-00	D0108-00	L0212-10	10099-00 (16)	T0399-11
24"	R1124-XX	B1510-XX	P0116-XX	D0309-00	D0109-00	L0213-10	10099-00 (16)	T0399-11

PLEASE HAVE THE METER SERIAL NUMBER WHEN ORDERING REPLACEMENT PARTS

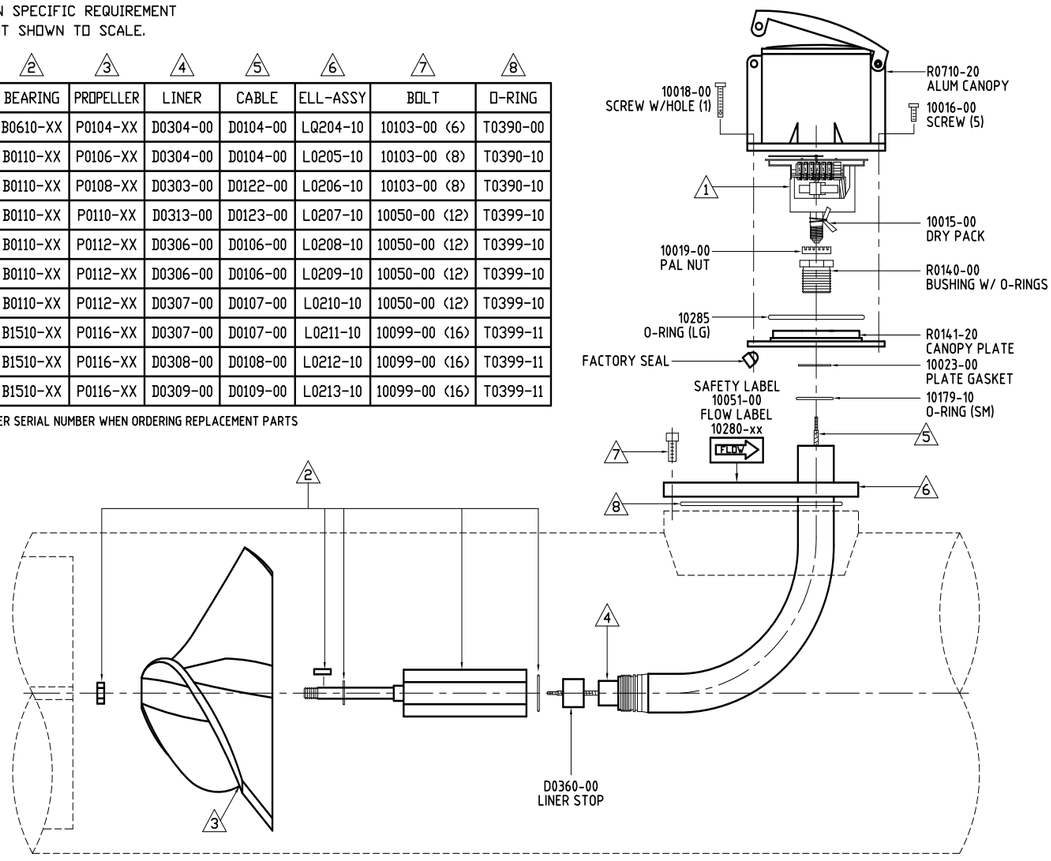

THIS DOCUMENT CONTAINS PROPRIETARY INFORMATION AND MAY NOT BE DISCLOSED TO OTHERS FOR ANY PURPOSE, NOR USED FOR MANUFACTURING PURPOSES WITHOUT WRITTEN PERMISSION FROM MCCROMETER, INC.

REV 5 | 7-12-2011 JT | Page 1 of 1

MZ500

McCROMETER

DESC: 4" THRU 16" TOP PLATE METERS 300 PSI

FILE: 24517-11-08.dwg | BY CEH | DATE 9-29-1993 | APP EDM | DATE 4-9-2007

NOTES:
1. XX DEPENDS ON SPECIFIC REQUIREMENT
2. DRAWING IS NOT SHOWN TO SCALE.

SIZE	REGISTER (1)	BEARING (2)	PROPELLER (3)	LINER (4)	CABLE (5)	ELL-ASSY (6)	BOLT (7)	O-RING (8)
4"	R1104-XX	B0610-XX	P0104-XX	D0304-00	D0104-00	LQ204-10	10103-00 (6)	T0390-00
6"	R1106-XX	B0110-XX	P0106-XX	D0304-00	D0104-00	L0205-10	10103-00 (8)	T0390-10
8"	R1108-XX	B0110-XX	P0108-XX	D0303-00	D0122-00	L0206-10	10103-00 (8)	T0390-10
10"	R1110-XX	B0110-XX	P0110-XX	D0313-00	D0123-00	L0207-50	10099-00 (12)	T0399-10
12"	R1112-XX	B0110-XX	P0112-XX	D0306-00	D0106-00	L0208-20	10099-00 (12)	T0399-10
14"	R1114-XX	B0110-XX	P0112-XX	D0307-00	D0107-00	L0209-30	10099-00 (12)	T0399-10
16"	R1116-XX	B0110-XX	P0112-XX	D0307-00	D0107-00	L0210-30	10099-00 (12)	T0399-10

PLEASE HAVE THE METER SERIAL NUMBER WHEN ORDERING REPLACEMENT PARTS

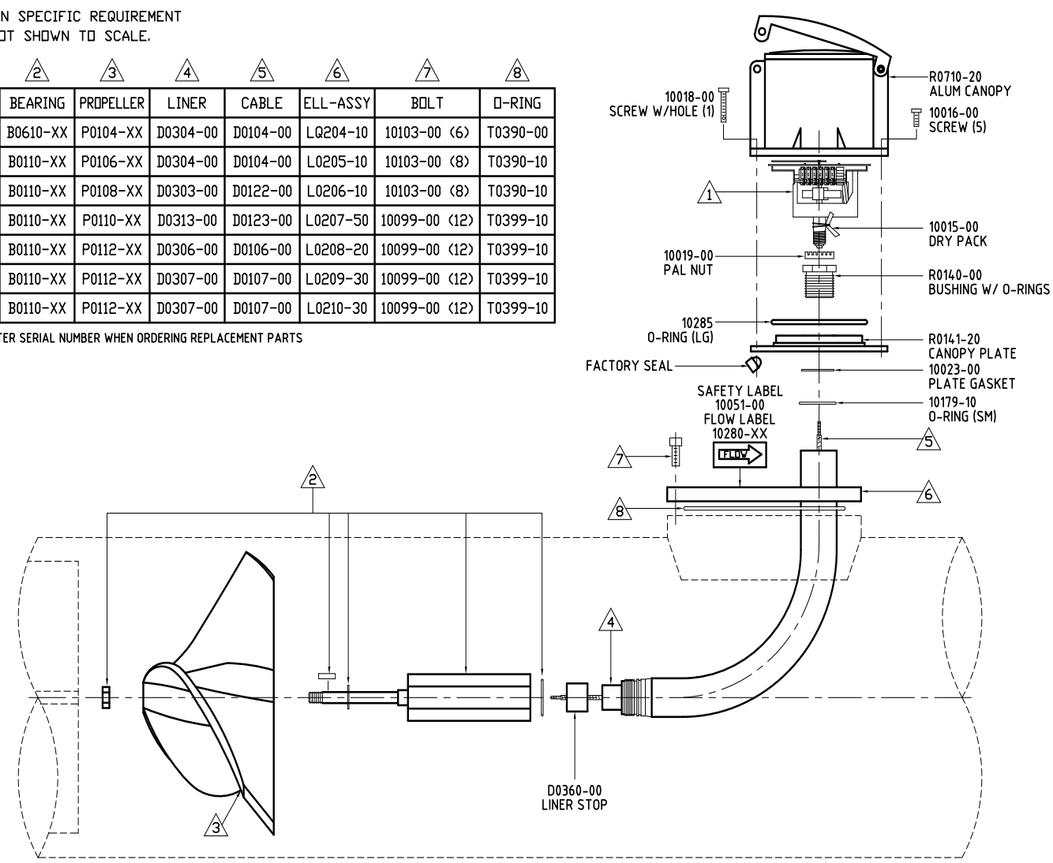

THIS DOCUMENT CONTAINS PROPRIETARY INFORMATION AND MAY NOT BE DISCLOSED TO OTHERS FOR ANY PURPOSE, NOR USED FOR MANUFACTURING PURPOSES WITHOUT WRITTEN PERMISSION FROM MCCROMETER, INC.

REV 4 | 7-12-2011 JT | Page 1 of 1

QW500

McCROMETER

FILE: 24517-11-09.dwg

DESC: 4" THRU 36" TOP PLATE METERS S304

BY CEH | DATE 9-28-1993 | APP EDM | DATE 4-10-2007

NOTES:
1. XX DEPENDS ON SPECIFIC REQUIREMENT
2. DRAWING IS NOT SHOWN TO SCALE.

SIZE	REGISTER (1)	BEARING (2)	PROPELLER (3)	LINER (4)	CABLE (5)	ELL-ASSY (6)	BOLT (7)	O-RING (8)
4"	R1104-XX	B0610-XX	P0204-XX	D0304-00	D0104-00	LQ204-10	10103-00 (6)	T0390-11
6"	R1106-XX	B0110-XX	P0206-XX	D0304-00	D0104-00	LQ205-10	10103-00 (8)	T0390-12
8"	R1108-XX	B0110-XX	P0208-XX	D0303-00	D0122-00	LQ206-10	10103-00 (8)	T0390-12
10"	R1110-XX	B0110-XX	P0210-XX	D0313-00	D0123-00	LQ207-10	10050-00 (12)	T0399-10
12"	R1112-XX	B0110-XX	P0112-XX	D0306-00	D0106-00	LQ208-10	10050-00 (12)	T0399-10
14"	R1114-XX	B0110-XX	P0112-XX	D0306-00	D0106-00	LQ209-10	10050-00 (12)	T0399-10
16"	R1116-XX	B0110-XX	P0112-XX	D0307-00	D0107-00	LQ210-10	10050-00 (12)	T0399-10
18"	R1118-XX	B1510-XX	P0116-XX	D0307-00	D0107-00	LQ211-10	10099-00 (16)	T0399-11
20"	R1120-XX	B1510-XX	P0116-XX	D0308-00	D0108-00	LQ212-10	10099-00 (16)	T0399-11
24"	R1124-XX	B1510-XX	P0116-XX	D0309-00	D0109-00	LQ213-10	10099-00 (16)	T0399-11
30"	R1130-XX	B1510-XX	P0145-XX	D0311-00	D0111-00	LQ216-10	10135-00 (16)	T0399-12
36"	R1136-XX	B1510-XX	P0146-XX	D0312-00	D0112-00	LQ217-10	10135-00 (16)	T0399-13

PLEASE HAVE THE METER SERIAL NUMBER WHEN ORDERING REPLACEMENT PARTS

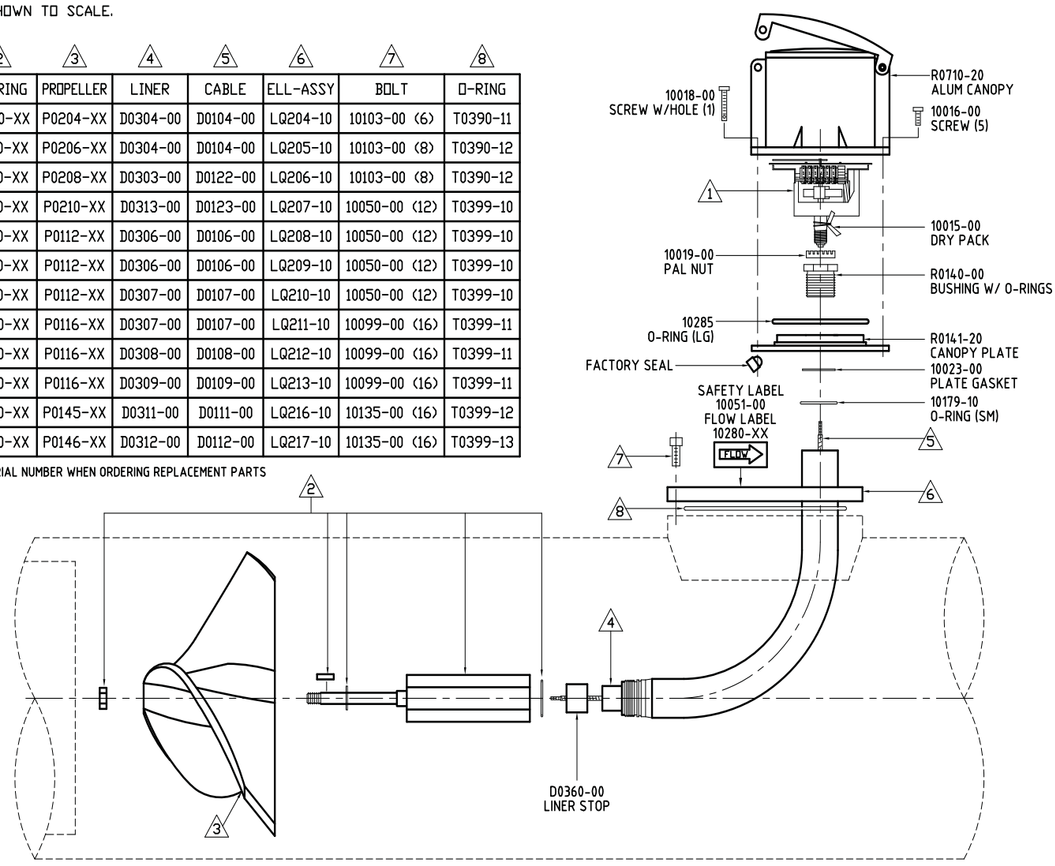

THIS DOCUMENT CONTAINS PROPRIETARY INFORMATION AND MAY NOT BE DISCLOSED TO OTHERS FOR ANY PURPOSE, NOR USED FOR MANUFACTURING PURPOSES WITHOUT WRITTEN PERMISSION FROM MCCROMETER, INC.

REV 5 | 7-12-2011 JT

M1104

McCROMETER

FILE: 24517-11-10.dwg

DESC: 4" FIRE HYDRANT METER

BY CEH | DATE 9-28-1993 | APP EDM | DATE 4-10-2007

NOTES:
1. XX DEPENDS ON SPECIFIC REQUIREMENT
2. DRAWING IS NOT SHOWN TO SCALE.

SIZE	REGISTER (1)	BEARING (2)	PROPELLER (3)	LINER (4)	CABLE (5)	TUBE (6)	ELL/END (7)
4"	R1104-XX	B0710-XX	P0104-XX	D0318-00	D0066-00	T0068-00	L0155-00

PLEASE HAVE THE METER SERIAL NUMBER WHEN ORDERING REPLACEMENT PARTS

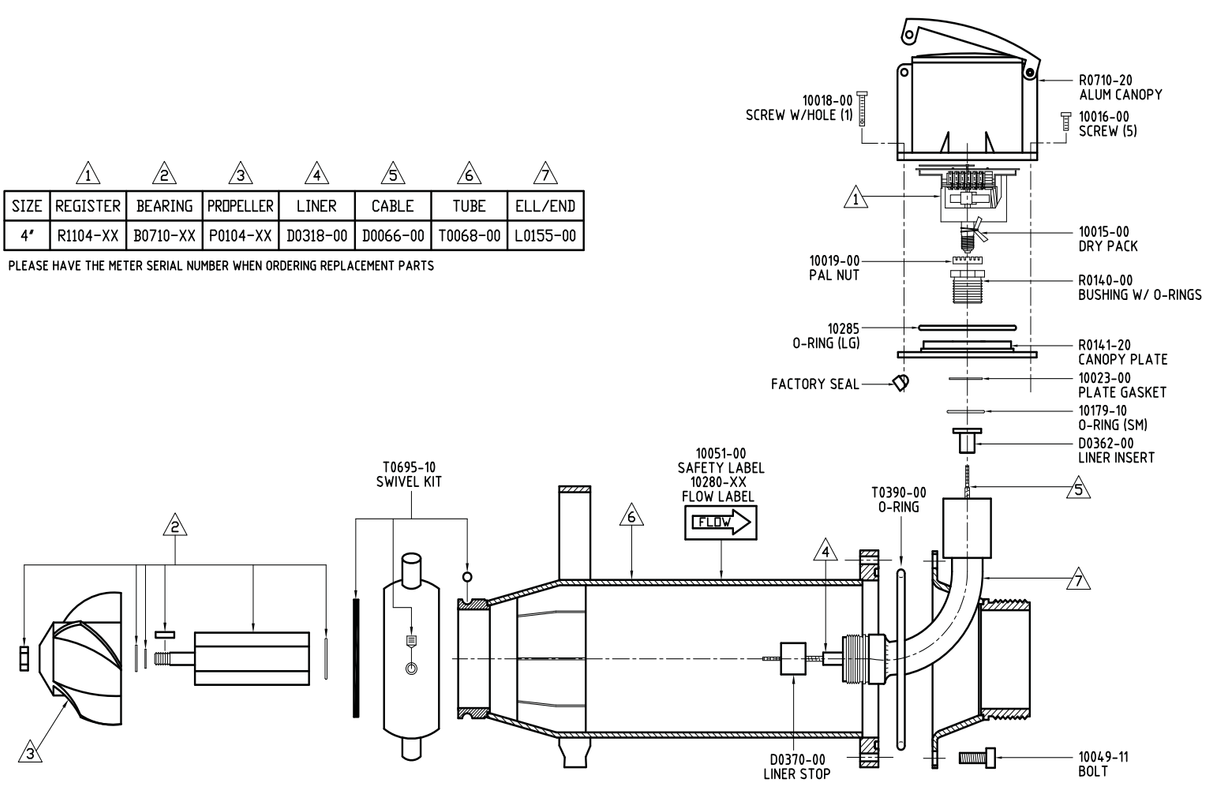

THIS DOCUMENT CONTAINS PROPRIETARY INFORMATION AND MAY NOT BE DISCLOSED TO OTHERS FOR ANY PURPOSE, NOR USED FOR MANUFACTURING PURPOSES WITHOUT WRITTEN PERMISSION FROM MCCROMETER, INC.

REV 6 | 7-12-2011 JT

M1400

McCROMETER

DESC: 18" THRU 48" BOLT ON SADDLE METERS

FILE: MAN M1400 | BY CEH | DATE 9-27-1993 | APP EDM | DATE 4-10-2007

NOTES:
1. XX DEPENDS ON SPECIFIC REQUIREMENT
2. DRAWING IS NOT SHOWN TO SCALE.
3. CONSULT FACTORY FOR U-STRAP SIZE.

MODEL	REGISTER (1)	BEARING (2)	PROPELLER (3)	LINER (4)	CABLE (5)	GASKET (6)	TEMPLATE
M1418	R1118-XX	B1510-XX	P0116-XX	D0306-00	D0106-00	T0384-12	10112-10
M1420	R1120-XX	B1510-XX	P0116-XX	D0307-00	D0107-00	T0384-12	10112-10
M1422	R1122-XX	B1510-XX	P0116-XX	D0307-00	D0107-00	X8001-00	10112-10
M1424	R1124-XX	B1510-XX	P0116-XX	D0308-00	D0108-00	X8001-00	10112-10
M1426	R1126-XX	B1510-XX	P0116-XX	D0308-00	D0108-00	X8001-00	10112-10
M1428	R1128-XX	B1510-XX	P0145-XX	D0309-00	D0109-00	X8001-00	
M1430	R1130-XX	B1510-XX	P0145-XX	D0309-00	D0109-00	X8001-00	
M1432	R1132-XX	B1510-XX	P0145-XX	D0310-00	D0110-00	X8001-00	
M1436	R1136-XX	B1510-XX	P0146-XX	D0311-00	D0111-00	X8001-00	
M1442	R1142-XX	B1510-XX	P0146-XX	D0312-00	D0112-00	X8001-00	
M1448	R1148-XX	B1510-XX	P0146-XX	29'	31.19'	X8001-00	

PLEASE HAVE THE METER SERIAL NUMBER WHEN ORDERING REPLACEMENT PARTS

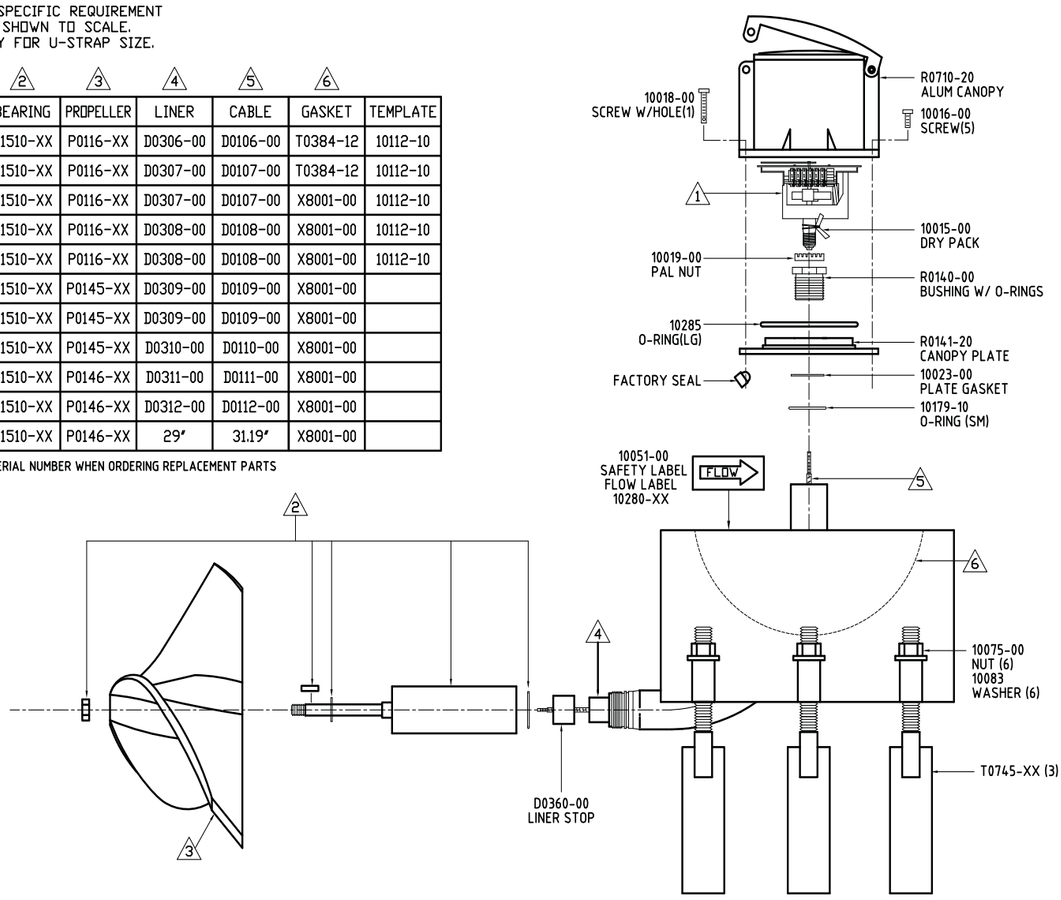

THIS DOCUMENT CONTAINS PROPRIETARY INFORMATION AND MAY NOT BE DISCLOSED TO OTHERS FOR ANY PURPOSE, NOR USED FOR MANUFACTURING PURPOSES WITHOUT WRITTEN PERMISSION FROM MCCROMETER, INC.

REV 5 | 7-12-2011 JT | Page 1 of 1

M1708 THRU M1736

McCROMETER

DESC: 8" THRU 36" OPEN FLOW METERS

FILE: 24517-11-12.dwg | BY CEH | DATE 10-01-1993 | APP EDM | DATE 4-10-2007

NOTES:
1. XX DEPENDS ON SPECIFIC REQUIREMENT
2. DRAWING IS NOT SHOWN TO SCALE.

SIZE	REGISTER (1)	BEARING (2)	PROPELLER (3)	LINER (4)	CABLE (5)	DROP PIPE (6)	HEIGHT
8"	R1108-XX	B0110-XX	P0108-XX	59"	D0126-00	L0775-10	5'
10"	R1110-XX	B0110-XX	P0110-XX	59"	D0126-00	L0775-10	5'
12"	R1112-XX	B0110-XX	P0112-XX	59"	D0126-00	L0775-10	5'
14"	R1114-XX	B0110-XX	P0112-XX	59"	D0126-00	L0775-10	5'
16"	R1116-XX	B0110-XX	P0112-XX	59"	D0126-00	L0775-10	5'
18"	R1118-XX	B1510-XX	P0116-XX	67.9"	D0127-00	L0776-10	6'
20"	R1120-XX	B1510-XX	P0116-XX	67.9"	D0127-00	L0776-10	6'
24"	R1124-XX	B1510-XX	P0116-XX	67.9"	D0127-00	L0776-10	6'
30"	R1130-XX	B1510-XX	P0145-XX	67.9"	D0127-00	L0776-10	6'
34"	R1134-XX	B1510-XX	P0146-XX	67.9"	D0127-00	L0776-10	6'
36"	R1136-XX	B1510-XX	P0146-XX	67.9"	D0127-00	L0776-10	6'

PLEASE HAVE THE METER SERIAL NUMBER WHEN ORDERING REPLACEMENT PARTS

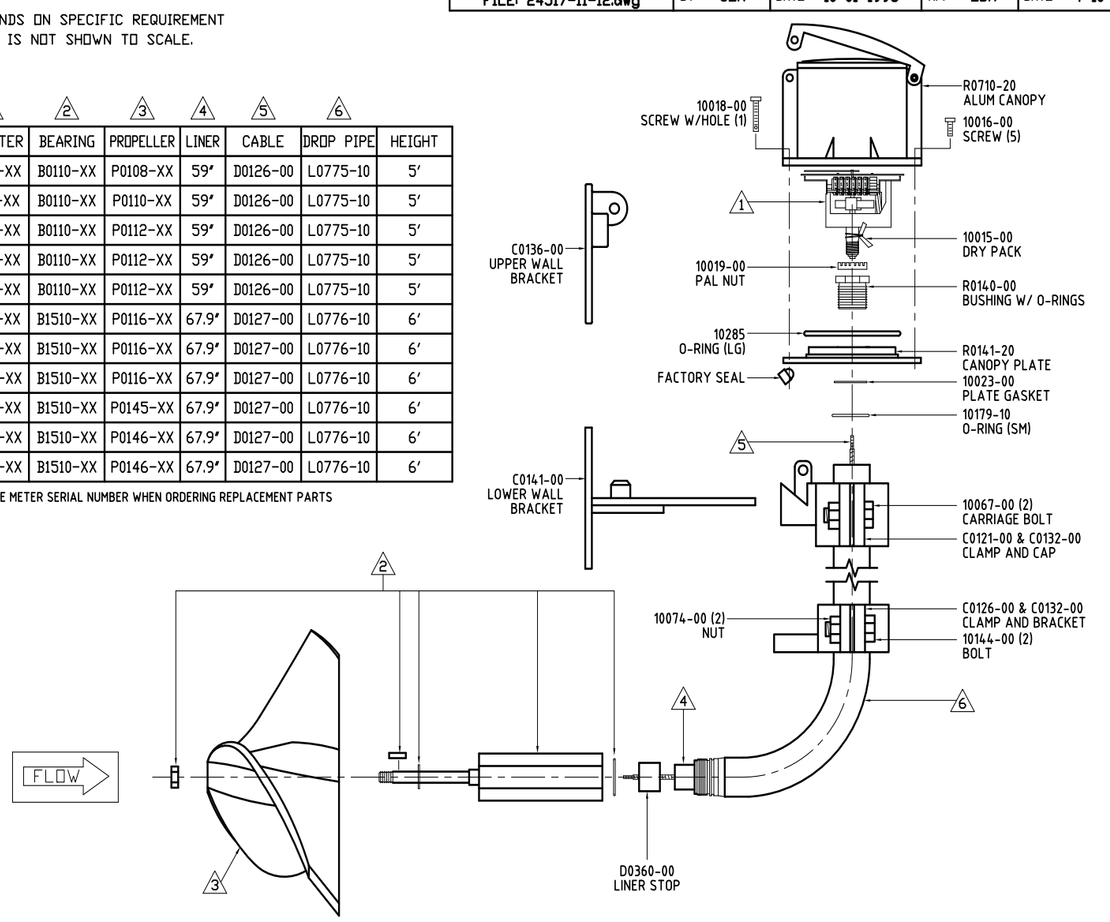

THIS DOCUMENT CONTAINS PROPRIETARY INFORMATION AND MAY NOT BE DISCLOSED TO OTHERS FOR ANY PURPOSE, NOR USED FOR MANUFACTURING PURPOSES WITHOUT WRITTEN PERMISSION FROM MCCROMETER, INC.

REV 4 | 7-12-2011 JT | Page 1 of 1

MM803 THRU MM816

McCROMETER

DESC: 8" THRU 24" DOWN-FLOW METERS

FILE: 24517-11-13.dwg | BY CEH | DATE 9-30-1993 | APP EDM | DATE 4-10-2007

NOTES:
1. XX DEPENDS ON SPECIFIC REQUIREMENT
2. DRAWING IS NOT SHOWN TO SCALE.

	1	2	3	4	5	6	7	8	DIMENSIONS		
SIZE	REGISTER	BEARING	PROPELLER	LINER	CABLE	BOLTS	O-RING	TOP PLATE	A	B	C
3"	R1103-XX	B0710-XX	P0103-XX	9.63"	11.62"	10049-10 (6)	10152-10	L0145-20	22.50"	5"	12.25"
4"	R1104-XX	B0610-XX	P0104-XX	15.75"	18.13"	10103-00 (6)	T0390-00	L0325-30	27.88"	6.50"	16.63"
6"	R1106-XX	B0110-XX	P0106-XX	16.25"	18.63"	10103-00 (8)	T0390-10	L0326-20	29.88"	8"	18"
8"	R1108-XX	B0110-XX	P0108-XX	22"	24"	10103-00 (8)	T0390-10	L0327-10	36.38"	9"	23"
10"	R1110-XX	B0110-XX	P0110-XX	27"	29.19"	10050-00 (12)	T0399-10	L0328-30	42.38"	11"	28"
12"	R1112-XX	B0110-XX	P0112-XX	32.25"	34.63"	10050-00 (12)	T0399-11	L0328-30	48.38"	12"	33"
14"	R1114-XX	B0110-XX	P0112-XX	37.25"	39.63"	10050-00 (16)	T0399-11	L0330-20	54"	14"	38"
16"	R1116-XX	B0110-XX	P0112-XX	42.25"	44.63"	10050-00 (16)	T0399-11	L0331-20	60"	15"	43"

PLEASE HAVE THE METER SERIAL NUMBER WHEN ORDERING REPLACEMENT PARTS

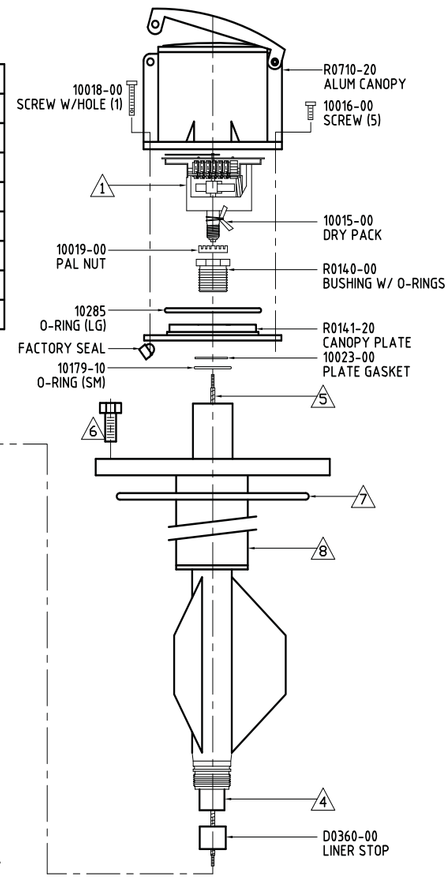

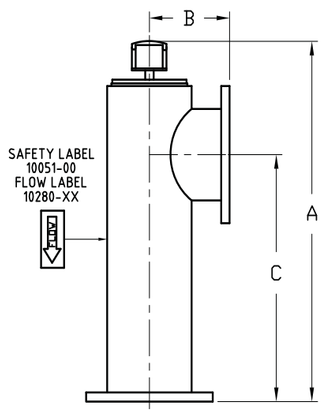

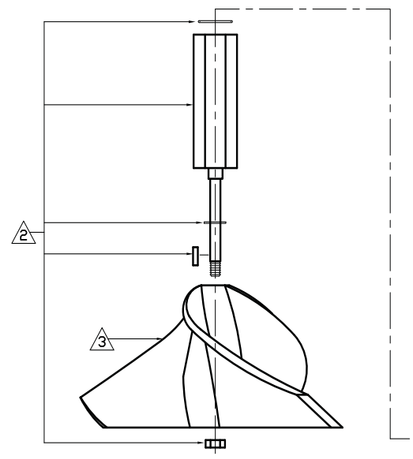

THIS DOCUMENT CONTAINS PROPRIETARY INFORMATION AND MAY NOT BE DISCLOSED TO OTHERS FOR ANY PURPOSE, NOR USED FOR MANUFACTURING PURPOSES WITHOUT WRITTEN PERMISSION FROM MCCROMETER, INC.

REV 4 | 7-12-2011 JT | Page 1 of 1

MW803 THRU MW824

McCROMETER

DESC: 8" THRU 24" UP-FLOW METERS

FILE: 24517-11-14.dwg | BY CEH | DATE 9-28-1993 | APP EDM | DATE 4-10-2007

NOTES:
1. XX DEPENDS ON SPECIFIC REQUIREMENT
2. DRAWING IS NOT SHOWN TO SCALE.

	1	2	3	4	5	6	7	8	DIMENSIONS		
SIZE	REGISTER	BEARING	PROPELLER	LINER	CABLE	BOLTS	O-RING	TOP PLATE	A	B	C
3"	R1103-XX	B0710-XX	P0103-XX	5.75"	7.75"	10049-10 (6)	10240-00	L0145-10	22.50"	5"	12.25"
4"	R1104-XX	B0610-XX	P0104-XX	7.38"	9.38"	10103-00 (6)	T0390-00	L0147-10	27.88"	6.50"	16.63"
6"	R1106-XX	B0110-XX	P0106-XX	8.75"	10.75"	10103-00 (8)	T0390-10	L0148-10	29.88"	8"	18"
8"	R1108-XX	B0110-XX	P0108-XX	12.25"	14.25"	10103-00 (8)	T0390-10	L0149-10	36.38"	9"	23"
10"	R1110-XX	B0110-XX	P0110-XX	15.25"	17.25"	10050-00 (12)	T0399-10	L0150-10	42.38"	11"	28"
12"	R1112-XX	B0110-XX	P0112-XX	18.25"	20.25"	10050-00 (12)	T0399-10	L0151-10	48.38"	12"	33"
14"	R1114-XX	B0110-XX	P0112-XX	20.88"	22.88"	10050-00 (16)	T0399-11	L0152-10	54"	14"	38"
16"	R1116-XX	B0110-XX	P0112-XX	21.75"	23.75"	10050-00 (16)	T0399-11	L0153-10	60"	15"	43"
18"	R1118-XX	B1510-XX	P0116-XX	23.75"	25.75"	10099-00 (16)	T0399-11	L0154-10	66"	16.50"	48"
20"	R1120-XX	B1510-XX	P0116-XX	25.75"	27.75"	10099-00 (16)	T0399-11	L0155-10	72.50"	18"	53.50"
24"	R1124-XX	B1510-XX	P0116-XX	42"	44"	10099-00 (16)	T0399-11	L0156-10	84.50"	22"	63.50"

PLEASE HAVE THE METER SERIAL NUMBER WHEN ORDERING REPLACEMENT PARTS

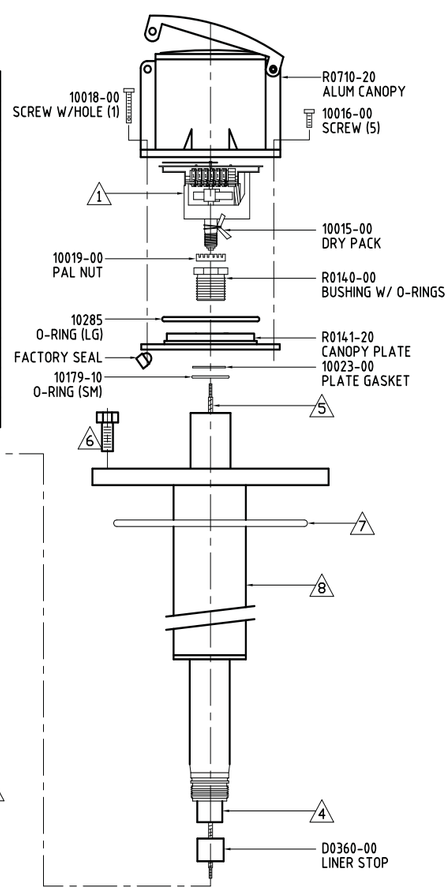

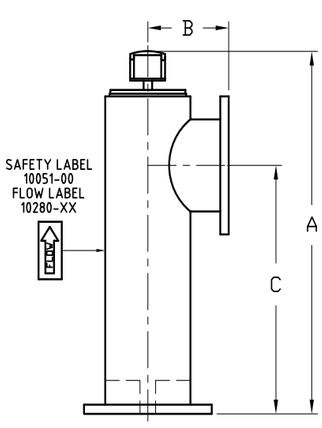

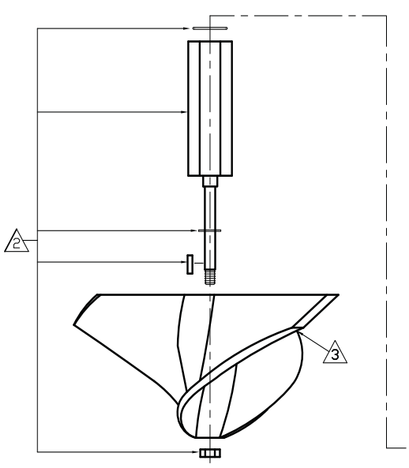

THIS DOCUMENT CONTAINS PROPRIETARY INFORMATION AND MAY NOT BE DISCLOSED TO OTHERS FOR ANY PURPOSE, NOR USED FOR MANUFACTURING PURPOSES WITHOUT WRITTEN PERMISSION FROM MCCROMETER, INC.

REV 6 | 7-12-2011 JT | Page 1 of 1

WARRANTY

This Warranty shall apply to and be limited to the original purchaser consumer of any McCrometer product. Meters or instruments defective because of faulty material or workmanship will be repaired or replaced, at the option of McCrometer Inc., free of charge, FOB the factory in Hemet, California, within a period of one (1) year from the date of delivery.
Repairs or modifications by others than McCrometer Inc. or their authorized representatives shall render this Warranty null and void in the event that factory examination reveals that such repair or modification was detrimental to the meter or instrument. Any deviations from the factory calibration require notification in writing to McCrometer Inc. of such recalibrations or this Warranty shall be voided.

In case of a claim under this Warranty, the claimant is instructed to contact McCrometer Inc., 3255 W. Stetson Ave., Hemet, California 92545, and to provide an identification or description of the meter or instrument, the date of delivery, and the nature of the problem.

The Warranty provided above is the only Warranty made by McCrometer Inc. with respect to its products or any parts thereof and is made expressly in lieu of any other warranties, by course of dealing, usages of trade or otherwise, expressed or implied, including but not limited to any implied warranties of fitness for any particular purpose or of merchantability under the uniform commercial code. It is agreed this Warranty is in lieu of and buyer hereby waives all other warranties, guarantees or liabilities arising by law or otherwise. Seller shall not incur any other obligations or liabilities or be liable to buyer, or any customer of buyer for any anticipated or lost profits, incidental or consequential damages, or any other losses or expenses incurred by reason of the purchase, installation, repair, use or misuse by buyer or third parties of its products (including any parts repaired or replaced); and seller does not authorize any person to assume for seller any other liability in connection with the products or parts thereof. This Warranty cannot be extended, altered or varied except by a written instrument signed by seller and buyer.

This Warranty gives you specific legal rights, and you may also have other rights which vary from state to state.

McCrometer Inc. reserves the right to make improvements and repairs on product components which are beyond the Warranty period at the manufacturer's option and expense, without obligation to renew the expired Warranty on the components or on the entire unit. Due to the rapid advancement of meter design technology, McCrometer Inc. reserves the right to make improvements in design and material without prior notice to the trade.

All sales and all agreement in relation to sales shall be deemed made at the manufacturer's place of business in Hemet, California and any dispute arising from any sale or agreement shall be interpreted under the laws of the State of California

OTHER McCROMETER PRODUCTS INCLUDE:

ULTRA MAG®	Magnetic Flowmeters
FPI Mag™	Magnetic Flowmeters
SPI Mag™	Magnetic Flowmeters
Mc Propeller Meter	Propeller Flowmeters
RemoteCONNECT™	Remote Telemetry System
Water Specialties Propeller Meter™	Propeller Flowmeters
V2 System™	Differential Pressure Flowmeters
VCONE®	Differential Pressure Flowmeters
Wafer-Cone®	Differential Pressure Flowmeters

Copyright © 1997-2011 McCrometer, Inc. All printed material should not be changed or altered without permission of McCrometer. Any published technical data and instructions are subject to change without notice. Contact your McCrometer representative for current technical data and instructions. Mc® of Mc Propeller is a registered trademark of McCrometer, Inc.

McCROMETER
www.mccrometer.com

3255 WEST STETSON AVENUE • HEMET, CALIFORNIA 92545 USA
TEL: 951-652-6811 • 800-220-2279 • FAX: 951-652-3078 Printed In The U.S.A.
Lit. #24517-11 Rev. 3.5/08-11