DISTRIBUTION DATE: _____3/29/13_____

CITY OF OAKLAND

MEMORANDUM

TO: HONORABLE MAYOR & CITY COUNCIL

FROM: Jim Reese

SUBJECT: P25 PUBLIC SAFETY RADIO SYSTEM—STATUS REPORT

DATE: March 29, 2013

City Administrator Approval **/s/ Deanna J. Santana**

Date **3/29/13**

INFORMATION

The purpose of this memorandum is to provide an update about current efforts made to identify and resolve recurring, intermittent issues with the City's P25 radio system. Since our last update, City staff and our vendor partners have continued their efforts to investigate and resolve numerous instances of radio frequency (RF) interference, and other operational issues which affected the performance of our first responder radios. This effort, in conjunction with the ongoing technical review into individual radio trouble reports made by our first responders have led City staff to take immediate corrective actions to resolve and stabilize the P25 radio system.

In addition to these efforts, in August 2012, the City began negotiations with the East Bay Regional Communications Authority (EBRCSA) to fully understand the costs involved to utilize the EBRCSA P25 radio system as an alternative to maintaining and operating the City's P25 radio system. This was one of several alternatives presented by the City's consultant RCC to resolve infrastructure and operational deficiencies found during the course of the consultant's investigation. Staff has been examining the technical feasibility of migrating our public safety communications to the EBRCSA radio system as well as conducting a cost-benefit analysis between both respective options.

Given the City's immediate need to provide reliable radio communications to our first responders, and since the EBRCSA P25 radio system had not yet been fully constructed, and did not provide radio coverage in the Oakland area, City staff began concentrating its efforts and limited resources to improve reliable radio communications to the City's P25 radio system as a short-term solution, while continuing to investigate various long-term solutions, including EBRCSA.

In August 2012, City staff concluded that numerous instances of officers reporting trouble with their radio were correlated to radio frequency (RF) interference occurring near cellular sites in various areas around the City. Immediately following this discovery, the City began to address RF interference testing and mitigation with Pericle Communications. We have engaged in field testing and verification of RF interference sources, filing applicable FCC reports to notify cellular operators to mitigate sites which have verified interference, and conducted technical RF

lab testing of our public safety radio fleet to verify the equipment meets all applicable standards in order to qualify for interference protection under FCC rules. These lab tests and field verification and mitigations are documented in the attached report named, "Subscriber Radio Performance Measurements." The summary of this report is as follows:

- Testing confirms that our P25 radio fleet exceeds all applicable performance standards and is therefore entitled to interference protection under FCC rules
- Field testing has verified that RF interference is caused directly or indirectly by signals coming from wireless transmission sites operated by cellular providers, either individually or in a combination of signals from the cellular carriers.
- FCC rules require wireless operators to mitigate interference upon notification and verification. The Oakland team has been working collaboratively with cellular carriers to mitigate interference on a case-by-case basis.

As of January 21, 2013, 43 wireless sites have been tested with the following results:

- 13 AT&T sites showed no problems
- 5 Nextel sites mitigated by the carrier
- 2 AT&T sites are complicated by another nearby public safety licensee, no resolution
- 1 co-located site was jointly mitigated by AT&T and Sprint-Nextel
- 3 sites are unable to be mitigated due to other signal level issues
- 20 AT&T sites mitigated by the carrier (19 reduced power, 1 beam up-tilt)

The testing report outlines the types of RF interference being experienced by our public safety radios, root causes, and recommended mitigation strategies to the responsible wireless carriers. The issue of cellular RF interference to public safety radios is not a new issue, and Oakland is among many other public safety licensees, both locally and nationwide who experience cellular RF interference. The City team continues to work diligently to locate and resolve cases of RF interference to ensure our first responders' radios perform within public safety standards.

While the issue of RF interference has been certainly a large contributor to the trouble experienced by our first responders, it is not the sole cause. The City discovered deficiencies in relation to the maintenance of our radios which have contributed to radio communication performance issues. City staff has taken numerous steps to address these deficiencies and continues to remedy them on an ongoing basis.

Since the RF interference mitigations began, and in conjunction with improvements to the maintenance of the subscriber unit fleet, and additional operational procedures, overall trouble reports have dropped by well over 85%, and the P25 radio system availability is performing above 99.999% which is well within public safety standards. In addition to the reduction in trouble reports, staff conducted a survey in January 2013 of the Oakland Police Department Communications Center dispatch staff in order to directly measure the perception and subjective opinions of improvements made since August 2012; about 50% of the active dispatch staff responded to the non-scientific survey. The key result of this survey is as follows:

In comparison to August 2012, is the P25 performing better, worse, or about the same?

- Much Better 34.6%
- Somewhat Better 30.8%
- Slightly Better 19.2%
- About the Same 15.4%
- Slightly Worse 0.0%
- Somewhat Worse 0.0%
- Much Worse 0.0%

We continue to direct public safety staff to report any radio problems so that we may continue to remedy these issues. City staff is making ongoing small, targeted improvements to the P25 radio system that produce positive, quantifiable results while continuing to investigate and resolve each and every radio trouble report. Over the next few weeks, staff anticipates completing the last phase in our maintenance plan which is anticipated to produce improvements in overall subscriber radio performance.

The technical review into EBRCSA is ongoing; however, it is important to note that the current phase of this investigation is focused on the ability for the City to migrate its existing radio subscriber fleet onto the EBRCSA P25 system. While much attention has been put on the ability of P25 radios to be "vendor agnostic" to allow interoperability across jurisdictions, regardless of radio manufacturer, the reality is interoperability should not be confused with operability. In fact, in the event Oakland were to migrate the subscriber radios onto EBRCSA as a full-time subscriber, it would be the very first public safety users to attempt to intermix a subscriber unit fleet with a different manufacturer's respective P25 radio system on a full-time basis, which causes the City to review this alternative with great caution. This is certainly not without great technical risk, and Oakland is well served in researching and testing all operational aspects of how our existing subscriber unit fleet is going to operate and react on the EBRCSA P25 system in regular day-to-day use.

To accomplish this testing, once City staff was notified by EBRCSA that it had completed construction of the radio sites covering Oakland, we provided two of our portable subscriber radio units to have them programmed onto the EBRCSA P25 system and allow for testing of both coverage, and subscriber operations. The City then contracted with RCC to complete the in-building coverage portion of the testing and signed an agreement with EBRCSA to allow the testing to commence. EBRCSA provided our programmed subscriber units back to the City in mid-February; since that time we have been working with our consultant to refine the test plan and finalize the automated test collection process. Staff anticipates having RCC begin their portion of the testing in mid-April, with final results on the testing provided to the City in early July.

This testing is the first step toward the City making a decision on how it wishes to proceed. It is important to note that the Oakland P25 radio system is a shared regional communications system, very much the same way EBRCSA serves multiple public entities. In addition to serving the day-to-day communication needs of the Oakland Police and Fire Departments, the Oakland

P25 radio system also serves several external entities, including the City of Piedmont (Police & Fire), Oakland Housing Authority (Police), Oakland Unified School District, Oakland School Police, and the Port of Oakland. Oakland serves these external entities in the form of service contracts and MOU's, and would need to consider and involve these entities in any decision to migrate users to another radio system.

The concept of Oakland operating and maintaining its own P25 radio system goes back to the regional vision for public safety interoperability under the current UASI project called BayRICS, or Bay Area Regional Interoperable Communications Systems. The Oakland P25 system is part of this regional "system of systems" approach for connecting all first responders in the Bay Area, and the Oakland P25 radio system was the first radio system to begin this interconnection to other systems when it demonstrated the first interoperable link to the underground BART P25 radio system in 2012.

Systems like Oakland are meant to be the gateway for smaller entities, like EBRCSA, whose mission is to consolidate many smaller radio systems across counties into a single system and allow their users to connect into the region using larger hub systems, like Oakland. In terms of interoperability from a technical perspective, **the Oakland P25 radio system and its users are already fully equipped to communicate with neighboring jurisdictions for purposes of mutual-aid.** Oakland has allowed numerous users to communicate on our P25 radio system, including the California Highway Patrol, East Bay Regional Park District, BART, and many other public safety entities.

Over the next month, additional progress will be made in several areas:

- Continue to investigate and mitigate cases of RF interference.
- Complete the maintenance on all Oakland Police portable subscriber units.
- Commence the in-building testing of the EBRCSA P25 radio system.
- Present a detailed plan to fully address the findings and recommendations of the RCC Consultants' independent radio system performance evaluation report.

Updates regarding progress made on resolving additional radio system issues will be forthcoming on a regular basis.

Respectfully submitted,

/s/
JIM REESE
Interim Administrative Services Director

Attachment (1)

Subscriber Radio Performance Measurements

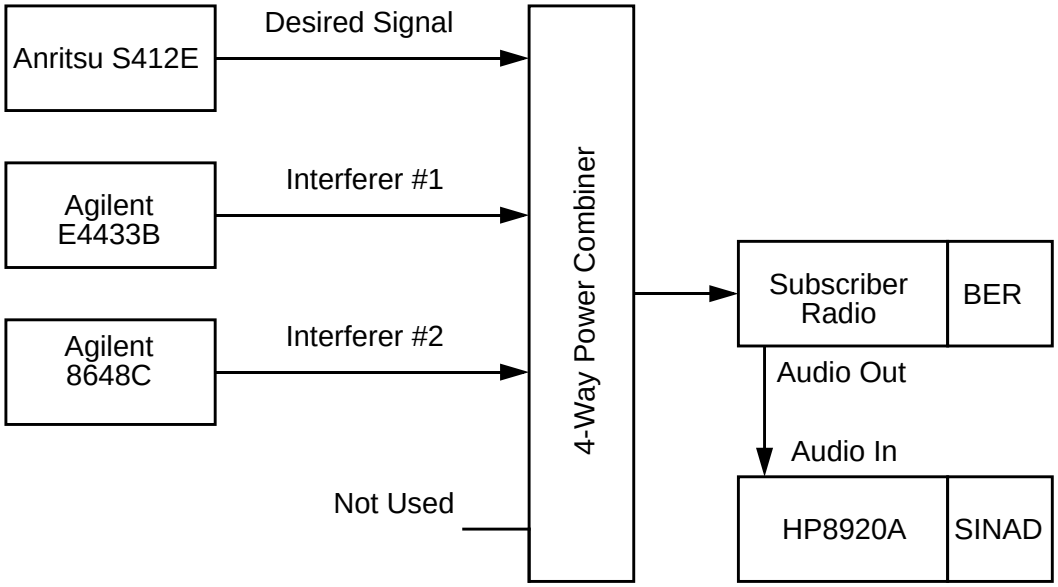

March 19, 2013
(Final Report)

Prepared by:

Jay M. Jacobsmeyer, P.E.
Pericle Communications Company
7222 Commerce Center Drive, Suite 180
Colorado Springs, CO 80919
(303) 759-5111
jacobsmeyer@pericle.com

For:

City of Oakland, California
Office of the City Administrator
Lionel J. Wilson Building
150 Frank H. Ogawa Plaza, Suite 7335
Oakland, CA 94612

Oakland Project Manager: David Cruise, *dcruise@oaklandnet.com*

Subscriber Radio Performance Measurements

1.0 Executive Summary

The City of Oakland ("Oakland") operates a 10-channel 800 MHz P25 simulcast trunked radio system in the 851-861/806-816 MHz public safety radio band. This radio system has been rebanded and is operating on its post-rebanded frequencies. Oakland recently experienced degradation of mobile and portable radio performance at numerous locations in the Oakland metropolitan area. Investigation by the City, its vendor Harris Corporation and its consultant Pericle Communications Company shows that the interference is caused directly or indirectly by signals emanating from cell sites operated by AT&T Mobility and Sprint-Nextel. In several cases, a combination of signals from Sprint-Nextel and AT&T Mobility is the culprit. In other cases, just one operator's cell site is required to cause harmful interference.

The nationwide 800 MHz rebanding project, funded by Sprint-Nextel, is designed to significantly reduce the occurrence of interference to public safety radio systems by separating the public safety band from the commercial wireless band. The potential for interference remains after rebanding, but at a much reduced level.

Interference from 800 MHz cell sites generally falls into three categories: transmitter out-of-band emissions (OOBE), receiver intermodulation (IM) and receiver overload. OOBE from AT&T cell sites in Oakland have been measured by the parties and found in virtually all cases to be too weak on the street to cause harmful interference. Receiver IM, on the other hand, is a problem and has been documented at numerous cell sites in Oakland. Receiver overload tends to occur at interfering levels above where receiver IM first appears, but overload can be the dominant problem very close to the cell site when a single carrier is present.

The wireless operators are obligated to mitigate interference under Part 22.970 of the FCC rules, even if the interference is created inside the public safety radio receiver as receiver IM [1]. With the cooperation of AT&T Mobility and Sprint-Nextel, the Oakland team (Oakland, Harris, Pericle) has been mitigating this interference on a case-by-case basis through a variety of means, including reducing transmitter power at the interfering cell sites.

Because receiver IM and overload are the dominant problems in Oakland, it is important to verify that the Oakland subscriber radios are meeting the applicable minimum performance standards, as found in FCC Part 22.970 [1]. Radios that do not meet minimum performance standards are not entitled to full protection under FCC rules. Accordingly, the parties requested that Pericle perform bench tests of the radios for the purpose of verifying that the radios meet minimum performance standards for sensitivity, adjacent channel rejection and receiver intermodulation per Part 22.970.

Oakland public safety users primarily use Harris P7200 portable radios and M7200 mobile radios. P7100 portable radios are also used and one new XG-75 portable radio was measured to compare it to older 7200 and 7100 model radios.

1.1 Compliance with FCC Minimum Performance Standards. Measurements were collected in accordance with TIA-603-D, an industry standard for analog FM radio operation [2]. Although the Oakland radios operate on a P25 digital trunked radio system, Part 22.970 was written with analog radios in mind, so TIA-603-D is the appropriate standard for these tests. Generally, digital receiver interference susceptibility is strongly correlated with analog susceptibility because the interference typically occurs in the receiver front end where hardware is common to both modes. The Part 22.970 receiver minimum standards are shown in Table 1.

Table 1 - Part 22.970 Minimum Performance Standards

Type	12 dB SINAD Sensitivity, dBm	Adj. Channel Rejection, dB	Intermod Rejection, dB
Mobile	-116	75	75
Portable	-116	70	70

Part 22.970 receiver compliance measurements of Oakland radios are shown in Table 2.

Table 2 - Measurement Summary
(Part 22.970 Compliance Per TIA-603-D Test Methods)

Model	S/N	12 SINAD Sensitivity, dBm	Adj. Channel Rejection, dB	Intermod Rejection, dB
P7200	A40041008E0B	-124.2	75.0	78.4
P7200	A4004100CB04	-123.6	75.2	75.7
P7200	A4004100C7A2	-123.8	74.2	74.4
P7200	A4004100CF64	-122.9	74.4	74.7
M7200	A4007400277C	-125.9	75.0	80.1
M7200	A40074002532	-125.9	75.7	81.1
P7100	9153197	-122.0	70.6	77.6
P7100	9153211	-122.4	71.5	78.1
P7100	9152390	-123.0	71.9	77.4
P7100	9153229	-122.4	70.9	77.4
XG-75	A40204000C2D	-123.4	72.2	78.4

Comparing the measurements of Table 2 with the minimum standards of Table 1, we see that all tested radios pass all three minimum standards.[1] Thus, the radios are entitled to protection under Part 22.970 provided the minimum desired signal level at the interference location is above threshold (-104 dBm for mobiles, -101 dBm for portables).

1.2 Background on the Problem in the Field. Given that OOBE are for the most part negligible and the subscriber radios comply with FCC Part 22.970 standards, one might ask why is there still a problem? The answer is that even the best quality commercially available radios have limited ability to tolerate strong interfering signals. Testing in the Oakland metropolitan area supports this conclusion. Consider the following:

- Signals from Sprint-Nextel and AT&T Mobility cell sites, either alone or in combination, are strong enough and occur on the correct frequencies to create harmful receiver intermodulation. These cases are well documented and the information has

[1]The values in Table 2 are the average of 10 values collected over the 10 receive frequencies used in the Oakland system. Both upper and lower adjacent and IM channels were measured and the lowest value of rejection is listed in Table 2. It is important to note that none of the measurements on any frequency fell below the minimum standard, including lower adjacent and upper adjacent channels.

been shared with the parties. Measured levels on the street near cell sites are routinely greater than -20 dBm and are sometimes greater than -10 dBm. Receiver intermodulation interference (3rd order) begins to affect the receiver at roughly -45 dBm.

- Signals from Sprint-Nextel and AT&T Mobility cell sites are in many cases strong enough to cause receiver overload without receiver intermodulation. Overload occurs at roughly -17 dBm of total interfering power. Although stronger signals are required to cause overload than receiver intermodulation, overload is still common because it does not require the precise mathematical relationship inherent to receiver IM. GSM signals in the 869-870 MHz band are especially troublesome because the front-end filter in the Oakland radios does not attenuate signals at these frequencies.

1.3 <u>AT&T vs. Sprint-Nextel</u>. The City of Oakland operates its radio system on frequencies between 851 and 855 MHz. Sprint-Nextel operates its iDEN push-to-talk radio network between 854 and 869 MHz, but following rebanding it will operate exclusively between 862 and 869 MHz. AT&T Mobility operates in two subbands, 869-880 MHz and 890-891.5 MHz. The 800 MHz band plan in Oakland is shown in Figure 1.

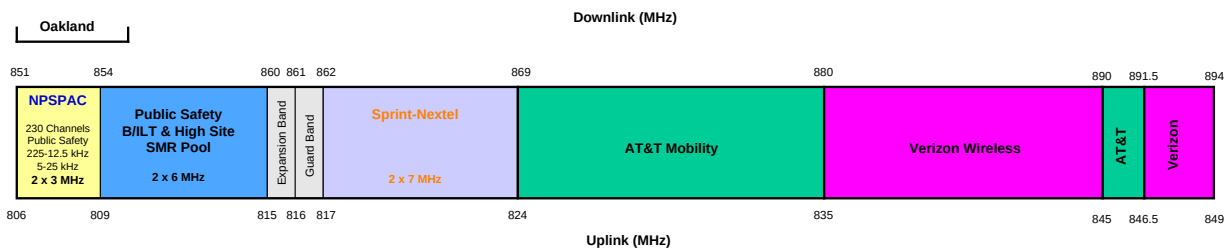

Figure 1 - 800 MHz Band Plan in Oakland, CA

To date, the main source of harmful interference has been AT&T Mobility despite the fact that Sprint-Nextel occupies spectrum adjacent to Oakland. There are several reasons for this disparity. First, Sprint-Nextel operates fewer active cell sites and handles many fewer calls than AT&T. When problems occur in Oakland, Sprint-Nextel usually just turns off the offending signal. The company can afford to do so because it is migrating customers off its iDEN network and will deactivate the network completely by 2017 with some markets terminating soon as June 2013. In its place, Sprint-Nextel will activate new CDMA base stations in the 862-869 MHz band at most of the existing iDEN cell sites. As the CDMA sites are activated, the potential for harmful interference will increase, but the lower power density (Watts/Hz) of CDMA compared to iDEN and somewhat taller sites than AT&T (on average) are mitigating factors.

AT&T, on the other hand, operates a densely populated network that handles a very high call volume each day. Many sites have antennas relatively close to the ground, resulting in strong signals that can cause receiver overload and receiver intermodulation by themselves or receiver intermodulation in combination with Sprint-Nextel signals.

1.4 Recommendations. There is a parallel effort in Oakland to mitigate interference on a site-by-site basis. To date, 47 sites have been investigated and most have been mitigated. See the Appendix to this report for a summary of this effort. Subscriber radio measurements have been used to better understand the interference experienced in the field and to guide mitigation efforts. Because bandpass filters are one of the best mitigation techniques, Pericle has acquired and has been testing 10 external filters with mobile radios. These filters provide over 30 dB rejection at 869 MHz. If bandpass filters prove effective in testing, Oakland should consider installing them in all vehicles with mobile radios.

Unfortunately, there is no practical bandpass filter solution available for the portable radios.

A complete analysis of mitigation methods is beyond the scope of this report, but following are some actions that deserve consideration as part of a larger effort to achieve a long term solution: employ cell site antennas with less null fill, reduce cell site transmitter power (already being done), use bandpass filters for mobiles (testing now), try small bandpass filters molded into the portable antenna (requires hardware development), and replace the P7200 with a newer radio like the XG-75. None of these solutions comes free of charge and some are only partial fixes. Cost-benefit tradeoffs may be necessary to arrive at an optimal solution.

2.0 Test Plan

800 MHz interference generally falls into three categories:

- *Out-of band emissions* (OOBE) which are unlikely from AT&T Mobility due to filtering used at the cell site. One exception is passive intermodulation (PIM) interference in the transmit antenna, but AT&T and Sprint-Nextel test for PIM at site activation and PIM tends to cause interference to the wireless operator's receivers, too. Thus, PIM is likely to be detected through normal cellular network operations.

- *Receiver intermodulation* which is possible, especially 3rd order products that include GSM signals in the 890-891.5 MHz band and 3rd order products that are mixes between AT&T and Sprint-Nextel carriers.

- *Receiver overload* which is caused by strong signals that do not have the mathematical relationship to produce IM products by themselves in the public safety radio receiver, but are strong enough to compress the front-end amplifier and desensitize the receiver. Receiver overload has three types: blocking, local oscillator (LO) mixing and receiver desense. These three types are defined by the Safecom best practices guide [3].

It is important to note that the first type of interference is most easily corrected by filtering at the cell site (unless there is PIM) while the other two types are most easily corrected by filtering at the subscriber radio. A typical public safety radio front-end filter passes 845-875 MHz, but quality is uneven and there is no industry standard for these filters.

Another type of interference that does not fall into any of these three categories is image

frequency interference. This type of interference occurs when a strong signal on the receiver's image frequency gets past the front-end filter and mixes with the LO in the first mixer to fall directly on the intermediate frequency (IF).[2]

All of these types of interference were investigated during this project.

The test plan generally followed the procedures described in TIA-603-D. A block diagram of the test setup for sensitivity, adjacent channel rejection and IM rejection is shown in Figure 2.

It is important to note that many signal generators have phase noise that is too high to measure adjacent channel or IM rejection down to the 70 dB level. Through trial and error, Pericle determined that its Agilent E4433B signal generator had sufficiently low phase noise and for this reason it was used for the adjacent channel interferer and the first IM interferer. Cable and splitter losses were measured with an Agilent E5071B network analyzer and the final calculations for each measurement were adjusted to account for these losses. All test equipment had current calibration at the time of testing. Test equipment used are listed in Table 3.

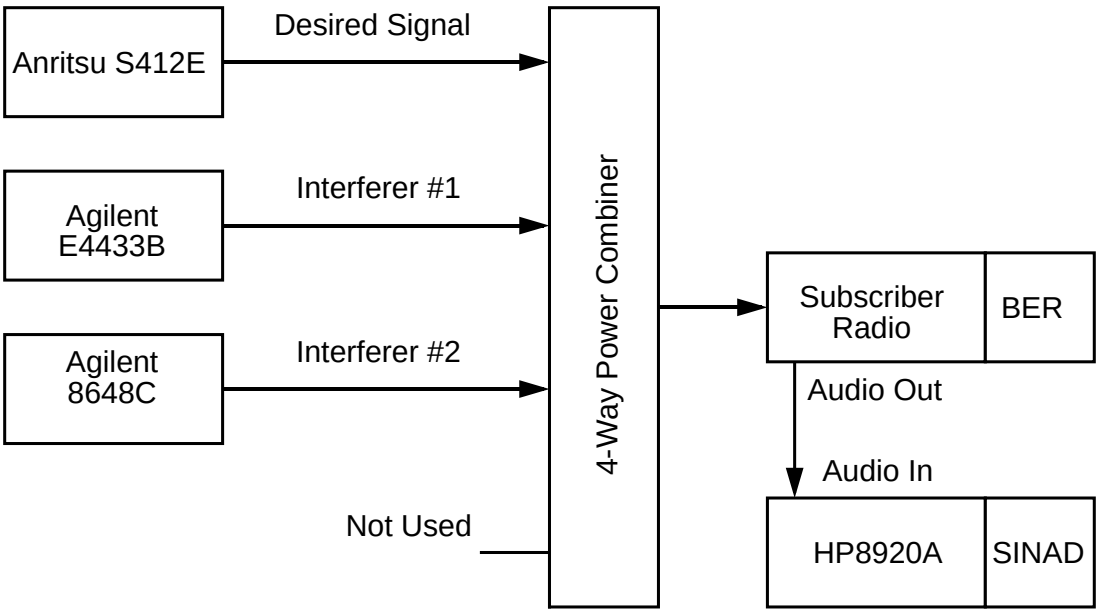

Figure 2 - Test System Block Diagram

The S412E LMR Master was loaned to Pericle by Anritsu. It was used to generate both analog and digital desired signals for the subscriber radio. In the digital case, the S412E was set to generate the standard P25 C4FM test signal which is a continuously repeating sequence of the bits 1011. This signal is similar to, but not identical to the Harris Corporation WCQPSK signal used on its simulcast networks. The S412E is not capable of generating a WCQPSK signal.

[2]The image frequency is twice the IF frequency above or below the RF frequency depending on whether the LO configuration is high side or low side, respectively.

Table 3 - Test Equipment Used				
Mfr.	**Model**	**Type**	**S/N**	**Cal Due**
Anritsu	S412E	LMR Master	1108054	Current
Agilent	E4433B	Signal Generator	US40051614	Dec 2014
Agilent	8648C	Signal Generator	3426A00754	Dec 2014
Agilent	8920A	Service Monitor	3350A07553	Dec 2014
Agilent	E5071B	RF Network Analyzer	MY42403489	Feb 2013

For receiver sensitivity measurements, both analog and digital, the two interfering signal generators were turned off. For adjacent channel rejection measurements, the 8648C signal generator was turned off.

Signal levels for image rejection and receiver overload are necessarily quite high and at these levels, phase noise in the 8648C dominates, even at frequencies above 869 MHz with desired frequencies below 855 MHz. For this reason, a bandpass filter was used with the 8648C for these measurements.

Because the broadband UMTS signals and even the 200 kHz-wide GSM signals used by AT&T Mobility do not resemble the standard interfering signals of TIA-603-D, some spot checks were done with GSM and UMTS interferers using the E4433B. IM measurements using these signals show that the subscriber radios respond to interference power in the receiver IF bandwidth in the same way regardless of the type of interferer. Similarly, for overload measurements, the total power in the RF passband is what matters, regardless of the type of signal.

3.0 Test Results

Part 22.970 measurements of receiver sensitivity, adjacent channel rejection and IM rejection were collected in accordance with TIA-603-D. Note that TIA-603-D requires that the adjacent channel be spaced 25 kHz away and be generated with two audio modulating tones, one at 650 Hz and one at 2200 Hz, each with 2.5 kHz deviation. The interferers for IM rejection are spaced at 50 kHz and 100 kHz from the carrier with the first signal unmodulated and the second modulated with a 400 Hz tone at 3 kHz deviation. Part 22.970 measurements are summarized in Table 4 (also found in Table 2 of the Executive Summary).

Adjacent channel rejection above about 75 dB is most likely limited by phase noise in the signal generator, so actual performance may be better than indicated in Table 4.

Note that all radios exceed the FCC Part 22.970 minimum performance standards listed in Table 1 (see Executive Summary).

Table 4 - Measurement Summary (Part 22.970 Compliance Per TIA-603-D Test Methods)				
Model	**S/N**	**12 SINAD Sensitivity, dBm**	**Adj. Channel Rejection, dB**	**Intermod Rejection, dB**
P7200	A40041008E0B	-124.2	75.0	78.4
P7200	A4004100CB04	-123.6	75.2	75.7
P7200	A4004100C7A2	-123.8	74.2	74.4
P7200	A4004100CF64	-122.9	74.4	74.7
M7200	A4007400277C	-125.9	75.0	80.1
M7200	A40074002532	-125.9	75.7	81.1
P7100	9153197	-122.0	70.6	77.6
P7100	9153211	-122.4	71.5	78.1
P7100	9152390	-123.0	71.9	77.4
P7100	9153229	-122.4	70.9	77.4
XG-75	A40204000C2D	-123.4	72.2	78.4

4.0 Conclusions

The P7200, M7200, P7100 and XG-75 subscriber radios all pass the minimum performance standards specified in FCC Part 22.970 and therefore qualify for interference protection provided the desired signal exceeds the minimum threshold of -104 dBm for mobiles and -101 dBm for portables [1].

Perhaps the most important defense against cellular 800 MHz interference is a good bandpass filter in the front end of the subscriber receiver. Virtually all contemporary receivers must pass frequencies up to 869 MHz because they must be compatible with pre-rebanded and post-rebanded systems. Thus, the bandpass filter cannot help with interference from Sprint-Nextel sites which generally operate in the 862-869 MHz band. Filter rejection in the cellular band is possible, but no practical filter is a brick wall and some energy from cellular operator signals will get into the receiver.

Following are some corrective actions that deserve consideration: employ cell site antennas with less null fill, uptilt antennas, reduce cell site transmitter power (already being done), use bandpass filters for mobiles (testing now), try small bandpass filters molded into the portable antenna (requires hardware development), and replace the P7200 with a newer radio like the XG-75.

Bandpass filters for the mobile radios and a replacement portable radio (like the XG-75) are the most straightforward solutions, but like all effective solutions, there is significant cost involved. Long term, manufacturers should install filters in public safety radios that only pass the post-rebanded public safety band (851-861 MHz). Such a filter should attenuate both Sprint-Nextel signals and AT&T signals sufficiently to eliminate the interference problem for all practical purposes.

5.0 References

[1] 47 CFR, Part 22.970, "Unacceptable interference to part 90 non-cellular 800 MHz licensees from part cellular radiotelephone or part 90-800 MHz cellular services, October 1, 2012.

[2] TIA-603-D, "Land Mobile FM or PM Communications Equipment Measurement and Performance Standards," June 24, 2010.

[3] A Best Practices Guide, "Avoiding Interference Between Public Safety Wireless Communications Systems And Commercial Wireless Communications Systems At 800 MHz," December, 2000, www.safecomprogram.gov.

[4] TIA TSB-88.1-C, TSB-88.2-C, TSB-88.3-C, "Wireless Communications Systems Performance in Noise and Interference-Limited Situations, Recommended Methods for Technology-Independent Modeling, Simulation and Verification," February, 2008.

Appendix - AT&T Site Mitigation Summary

As of January 21, 2013, the following summary applies to the Oakland interference mitigation effort:

43 locations visited:

- 13 AT&T sites showed no problem (preemptive visits, no prior complaints)
- 5 sites Nextel mitigated
- 2 sites complicated by public safety site repeater interference, no resolution yet
- 1 site Nextel and AT&T both mitigated (included in 20 AT&T mitigated sites below)
- 3 sites signal too low or excessive multipath (cannot be attributed to cellular operator)
- 20 sites AT&T mitigated (1 beamtilt, 19 reduced power)

See the attached spreadsheet for more information.

	Latitude	Longitude	Address	City	Oakland P25 Signal Level	Bit Error Rate	UMTS Modification	GSM Modification	Test Date and Time	Signals at Site	Zip
1	37.7846388	-122.240916	2011 EAST 12TH STREET	Oakland	-80 dBm	8%	-3 dB Lower	-8 dB and 8 deg. Downtilt from 13 deg.	21 Sep 1900	LTE 2 UMTS GSM mid, PCS 1940-55 2 UMTS & GSM and no 1985	94606
2	37.47326	-122.15305	601 5th Ave	Oakland	-77 dBm	12%	Need to involve BART who has not rebanded	Need to involve BART who has not rebanded	1700 26Sep in street and next to building alpha	LTE 2 UMTS GSM mid, PCS 1940-55 2 UMTS & GSM and 1985 VZW	94606
3	37.78725	-122.19476	4300 MACARTHUR BLVD	Oakland	-85	15%	-4 dB both and Beta/Gamma	-10 dB	0907 26Sep Corner of High4and MacArther	LTE 2 UMTS GSM low, PCS 1940-55 2 UMTS & GSM (no 1985)	
4	37.8523333	-122.223666	1307 TUNNEL ROAD	Oakland		0%	None	None	1600 7Oct12	LTE 2 UMTS GSM low, PCS 1940-55 Couldn't get close to site	
5	37.4739	-122.14347	1930 12th Ave	Oakland		0%	None	None	1500 26Sep	ATT and Nextel but high and blocked building roof site	
6	37.7389722	-122.175583	10203 E STREET	Oakland		0%	None	None		ATT Only	
7	37.81204	-122.1987	2810 Mountain Blvd Same as Hwy 13 and Miller	Oakland	-85	14%	-6dB single upper	None	24-Sep	Adding UMTS carrier	
8			400 Alcatraz Ave	Oakland	-85	1%	none	None	1437 7oct12	2 UMTS GSM low on north, PCS ATT only	
9			1189 58th Ave	Oakland		0%	none	None		Cell Site but Not ATT - found no interference - in industrial complex	
10	37.454	-122.10308	8925 Holly Street	Oakland		0%	none		0800 26Sep	RECHECK	
11	37.77457	-122.23077	3100 East 9th Street	Oakland	-80	>10%	-4 dB	-10 dB	915 25Sep Beta in front of Bank of America BETA	LTE, 850 UMTS X2. GSM low, PCS 1940-55 2 UMTS & GSM (no 1985)	
12	37.48142	-122.16148	1587 Franklin Street	Oakland		0%	none			Att and Nextel In area	
13	37.48404	-122.15532	2150 Webster Street Site likely on hotel on harrison	Oakland		0%	none		1000 26Sep	High Site, unlikely problem	
14	37.8394722	-122.263416	5427 TELEGRAPH	Oakland	-73	9%			1400 7Oct12	2UMTS LTE GSM high ATT only PCS also	
15	37.7603888	-122.221	4909 TIDEWATER AVE	Oakland	-75	7%	-5 dB both	-10 dB	1015 25Sep Capital Intermodal hard to make happen	LTE 2 UMTS GSM high, PCS 1940-55 2 UMTS & GSM (no 1985)	
16	37.7922222	-122.258527	601 8TH STREET Does Not Exist	Oakland		0%	none	None	1530 26Sep	Most Likely Nextel	
17	37.7587222	-122.186694	7425 E 14TH STREET	Oakland		0%	none	None	0830 26Sep	RECHECK!	

	Latitude	Longitude	Address	City	Oakland P25 Signal Level	Bit Error Rate	UMTS Modification	GSM Modification	Test Date and Time	Signals at Site	Zip
18	37.8253055	-122.267	3601 TELEGRAPH AVE	Oakland	-75	12%	-4 dB Both	-8 dB	1600 26Sep on 37th at bend gamma	LTE 2 UMTS GSM high, PCS 1940-55 2 UMTS & GSM (no 1985)	94609
19	37.77185	-122.20048	Bancroft Ave @ Fairfax Blvd 5407 Bancroft	Oakland	-84	8%	GSM Mitigated	UMTS Mitigated	1300 8Oct12	ATT Nextel	95601
20	37.73599	-122.16416	International Blvd @ Durant Blvd	Oakland	-79	15%	None (Nextel Interference Problem, Nextel Channel Off)	None (Nextel Interference Problem, Nextel Channel Off)	25-Sep In rear parking lot at base of tower	NEX,ATT and VZW LTE, 850 UMTS X2. GSM exp, PCS 1940-55 2 UMTS & GSM (yes UMTS 1985)	
21	37.73048	-122.21073	Oakland Airport Hangar 3 8711 Earhart Road (ATT Site 8)	Oakland	-73	12%	-5 dB Upper	-10 dB	1045 25Sep intersection Swan and	No LTE 1 UMTS GSM low, PCS 1940-55 2 UMTS & GSM (no 1985)	
22	37.8290277	-122.290861	1552 BEACH STREET	EMERYVILLE	-85	10%	ATT -6 UMTS	-4 GSM	1400 21Sep12	ATT and VZW, LTE UMTS, GSM	94608
23	37.8796388	-122.306916	1255 EASTSHORE HWY	BERKELEY							
24	37.7040555	-122.161055	1465 FACTOR AVE	San Leandro	-90	15%	None Multipath Simulcast Overlap	None Multipath Simulcast Overlap	1502 25Sep by 1401 address Beta	LTE 2 UMTS GSM high, PCS 1940-55 2 UMTS & GSM (no 198	
25	37.6968888	-122.183277	13800 MONARCH BAY DR	San Leandro	-93	11%	4 degree downtilt	4 degree downtilt	1127 25 Sep Fairway and Blue Whale Beta	LTE 2 UMTS GSM high and low and exp, PCS 1940-55 2 UMTS & GSM (no 1985)	
26	37.6886944	-122.13397	50 EAST LEWELLING	San Leandro	-95	12%	None Desired Signal too Low	None Desired Signal too Low	25 September 2012 in parking lot at site Alpha	ATT, Nextel and VZW	
27	37.48339	-122.2272	Naval Air Station	Treasure Island							
28	37.75776	-122.146	3769 Dorisa Ave	Oakland	-85	0%	None	None	8 Oct 12 No interference		
29	37.70581	-122.12979	1459 150th Ave	San Leandro	-93	CC Scan	-4 both UMTS carriers	-10 (GSM Low)	25 Sep 1623 Parking lot HofBrua	ATT and VZW LTE, 850 UMTS X2. GSM low, PCS 1940-55 2 UMTS & GSM (yes UMTS 1985)	
30	ATT		80 Grand Ave	Oakland	-65	0%	None	None	1629 26Sep	LTE 2 UMTS GSM high, PCS 1940-55 2 UMTS & GSM	
31	NEXTEL		4600 Telegraph	Oakland	-20	0%	None	None	1230 7Oct12	Nextel only 868 range	
32	NEXTEL 37.85793	-122.24381	Domingo and Ashbey 11 Domingo Ave.	Oakland	-85	3%	Nextel moved 854 MHz to 863 MHz Channel		1500 7Oct12	Nextel and VZW 854 MHz Active and 861s	

	Latitude	Longitude	Address	City	Oakland P25 Signal Level	Bit Error Rate	UMTS Modification	GSM Modification	Test Date and Time	Signals at Site	Zip
33	Nextel 37.79975	-122.274	7th St. and Broadway	Oakland	-75	3%	Nextel moved 854 MHz to 863 MHz Channel		1600 7-Oct-12	Nextel with 854 MHz active	
34	Nextel 37.77911	-122.22888	30th Ave and 14th St.	Oakland	-80	3%	Nextel moved 854 MHz to 863 MHz Channel		2300 11-Oct-12	Nextel with 854 MHz active	
35	ATT 37.8162	-122.25276	Adams and MacArthur	Oakland	-75	18%	ATT Beta UMTS -3 dB	ATT GSM -3 dB Alpha	0900 16Nov12	ATT Only	94611
36	37.79841	-122.28356	2nd St and Brush	Oakland	-70	8%		Nextel – 3dB 7 carriers	1100 16Nov12	ATT, Nextel, VZW	94607
37	37.799922	-122.270925	9th St and Webster	Oakland	-70	6%	ATT – 2 dB on UMTS		1500 16Nov12	ATT Only	94607
38	37.78449	-122.22219	2112 Fruitvale	Oakland	-90	11%	ATT UMTS – none	GSM -4 dB two sectors	1200 16Jan13	ATT VZW Sprint	
39	37.797	-122.20452	3022 MacArthur	Oakland	-85	12%	ATT UMTS -1 dB both carriers Nextel -3 dB all carriers	ATT GSM -10 dB	1300 16Jan13	ATT Nextel T-Mobile Sprint	
40	37.78111	-122.17603	Overdale and Seminary Rd	Oakland	-95 and lower	8%	None Desired Signal too Low	None Desired Signal too Low	1400 16Jan13	ATT VZW TMobile	
41	37.71693	-122.18268	Redwood and Mountain Blvd	Oakland	-95	10%	None Multipath Suspected	None Multipath Suspected	1500 16Jan13	ATT Sprint TMobile	
42	37.811824	-122.266609	2255 Broadway	Oakland		0%			1200 21-Jan-13		
43	37.802886	-122.239256	2825 Park Blvd	Oakland	-75	13%			1300 21Jan13		
44	37.808583	-122.253678	401 Grand Ave	Oakland	-85	20%			1400 21Jan13		
45	37.827106	-122.278826	36th St and San Pablo	Oakland	-85 Cc scan rpt	0%			1500 21Jan13		
46	37.831347	-122.245437	5000 Piedmont Ave								
47	37.746929	-122.200894	8000 Coliseum Way								