Makkeweks

measure DD Public Art at Lake Merritt by WOWHAUS

MAY, 2016

Lake Merritt, once a tidal marsh system and estuary with an inlet to the Bay, was home to a variety of wildlife including leopard sharks and bat rays. Sightings of these creatures likely inspired the stories of sea monsters in the Lake. Such stories originated with the Ohlone and persist in our imagination today.

As Lake Merritt's habitat is enhanced and tidal exchange increases, marine wildlife will become more abundant. Makkeweks is an homage to the Lake's renewal and a harkening of the return of resident fauna. Inspired by the bat ray, leopard shark, pipefish and goby, Makkeweks is a sea monster, perhaps as imagined by the Ohlone or by early European settlers, or by future generations upon glimpsing a mysterious fin or hump rising from the estuary.

To help contextualize Makkeweks, the sculpture will be complemented by a series of photo-etched granite "portals" integrated into the hardscape, depicting marine life supported in Lake Merritt.

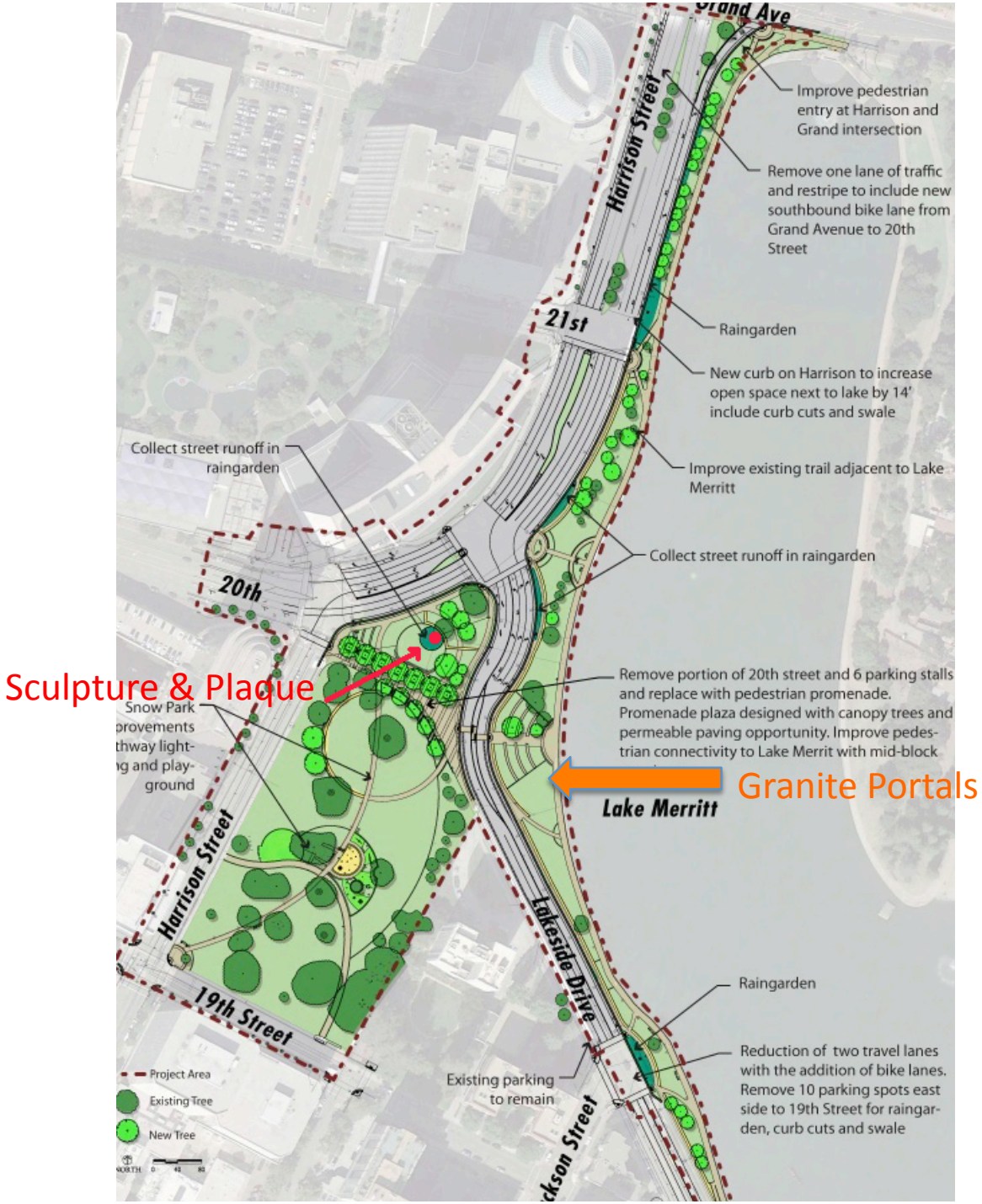
Grand Ave
Harrison Street
Improve pedestrian entry at Harrison and Grand intersection
Remove one lane of traffic and restripe to include new southbound bike lane from Grand Avenue to 20th Street
21st
Raingarden
New curb on Harrison to increase open space next to lake by 14' include curb cuts and swale
Collect street runoff in raingarden
Improve existing trail adjacent to Lake Merritt
Collect street runoff in raingarden
20th
Sculpture & Plaque
Snow Park
Remove portion of 20th street and 6 parking stalls and replace with pedestrian promenade. Promenade plaza designed with canopy trees and permeable paving opportunity. Improve pedestrian connectivity to Lake Merrit with mid-block
Granite Portals
Lake Merritt
Harrison Street
Lakeside Drive
19th Street
Raingarden
Reduction of two travel lanes with the addition of bike lanes. Remove 10 parking spots east side to 19th Street for raingarden, curb cuts and swale
Existing parking to remain
Project Area
Existing Tree
New Tree

Sample of etched granite – Wowhaus Emeryville Greenway Public Art

ETCHED GRANITE PORTAL LOCATIONS

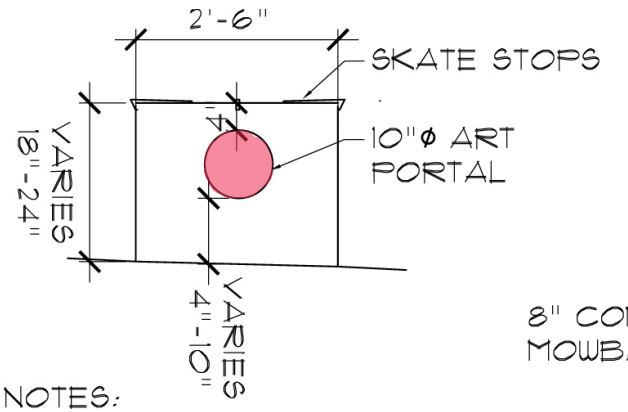

NOTES:
1. SKATE STOPS SHOULD INSTALLED AS SHOWN ON PLANS SHEET DR-7. SEE SPECS
2. VANDL-GUARD 10 TO BE APPLIED AS PER SPECS
3. FINISH: MEDIUM TO HEAVY SANDBLAST
4. COLOR: 1266 COOL GRAY BY LM SCOFIELD CO.

NOTES:
1. TEMPLATE FOR PLAQUE TO BE PROVIDED BY ARTIST
2. PLAQUE MOUNTING TO BE DONE BY ARTIST

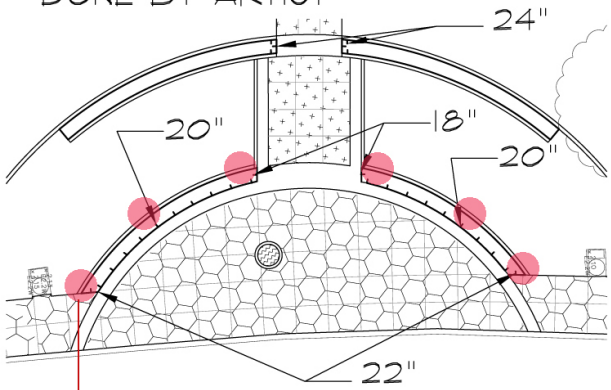

INTRODUCTORY PORTAL WITH TEXT

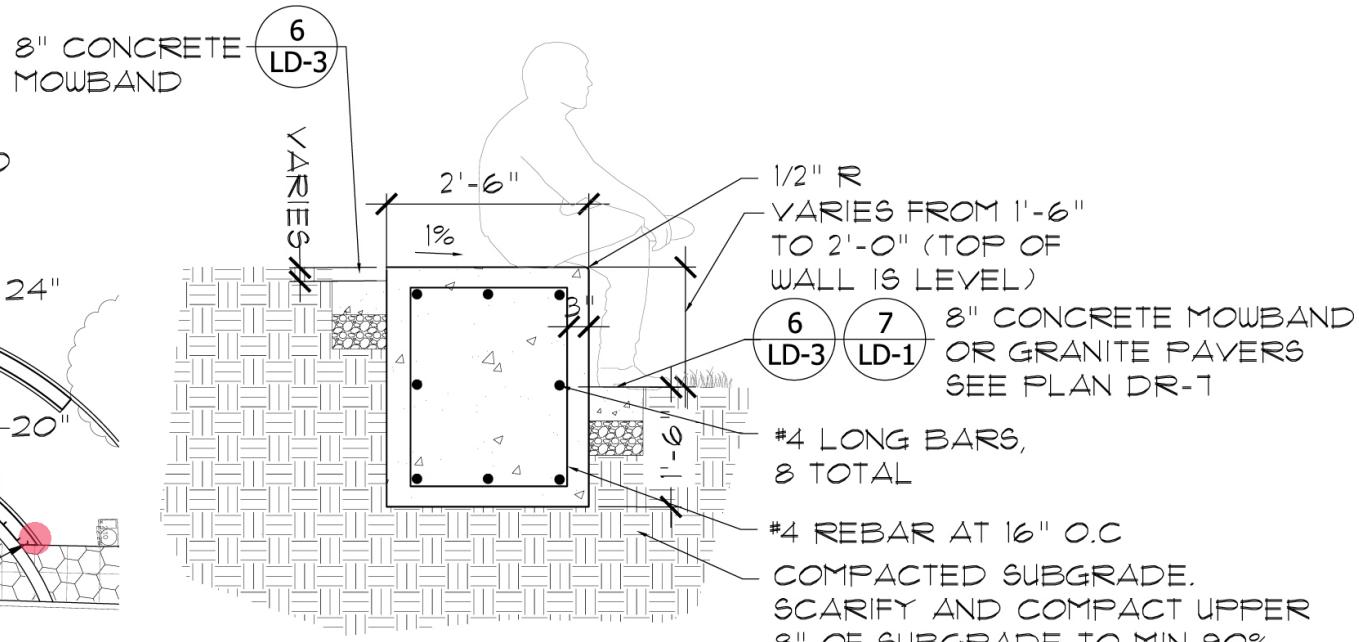

SECTION (FACING NORTH)

1

2'-6" WIDE SEATWALL AT LAKE

SCALE: 1/2" = 1'-0"

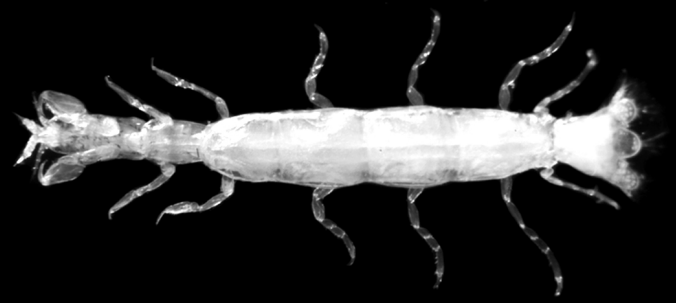

An abundance of species live in Lake Merritt.
These granite "portals" reveal just a few of the fantastical creatures found beneath the lake's surface.Scientists discover about 18,000 new species globally each year. What amazing new creatures could be discovered in the lake in the years to come?

Art by Wowhaus • Photos: Damon Tighe

2017

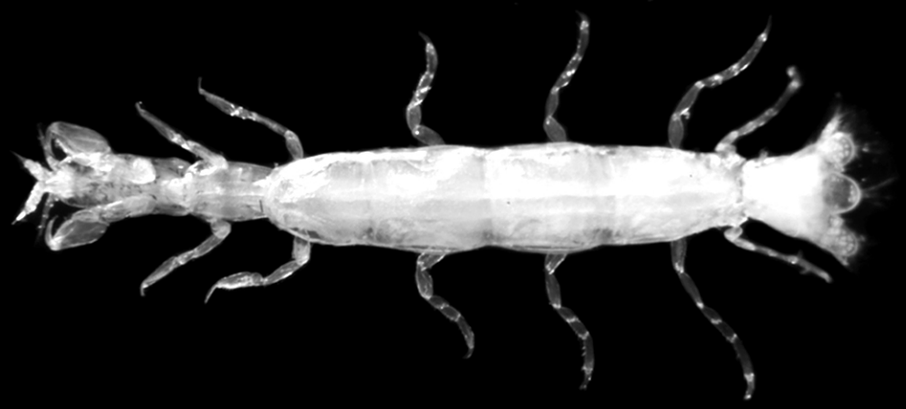

An abundance of species live in Lake Merritt.

These granite "portals" reveal just a few of the fantastical creatures found beneath the Lake's surface. Scientists currently identify about 18,000 new species globally each year. What amazing new creatures could be discovered in the Lake in the years to come?

Art by Wowhaus • Photos: Damon Tighe

2017

Size: 10” diameter
Photo-etched granite panel
Etched stainless steel ring set flush with concrete

DIADUMENE LINNEATA

Polycera Hedgpethi (Native)

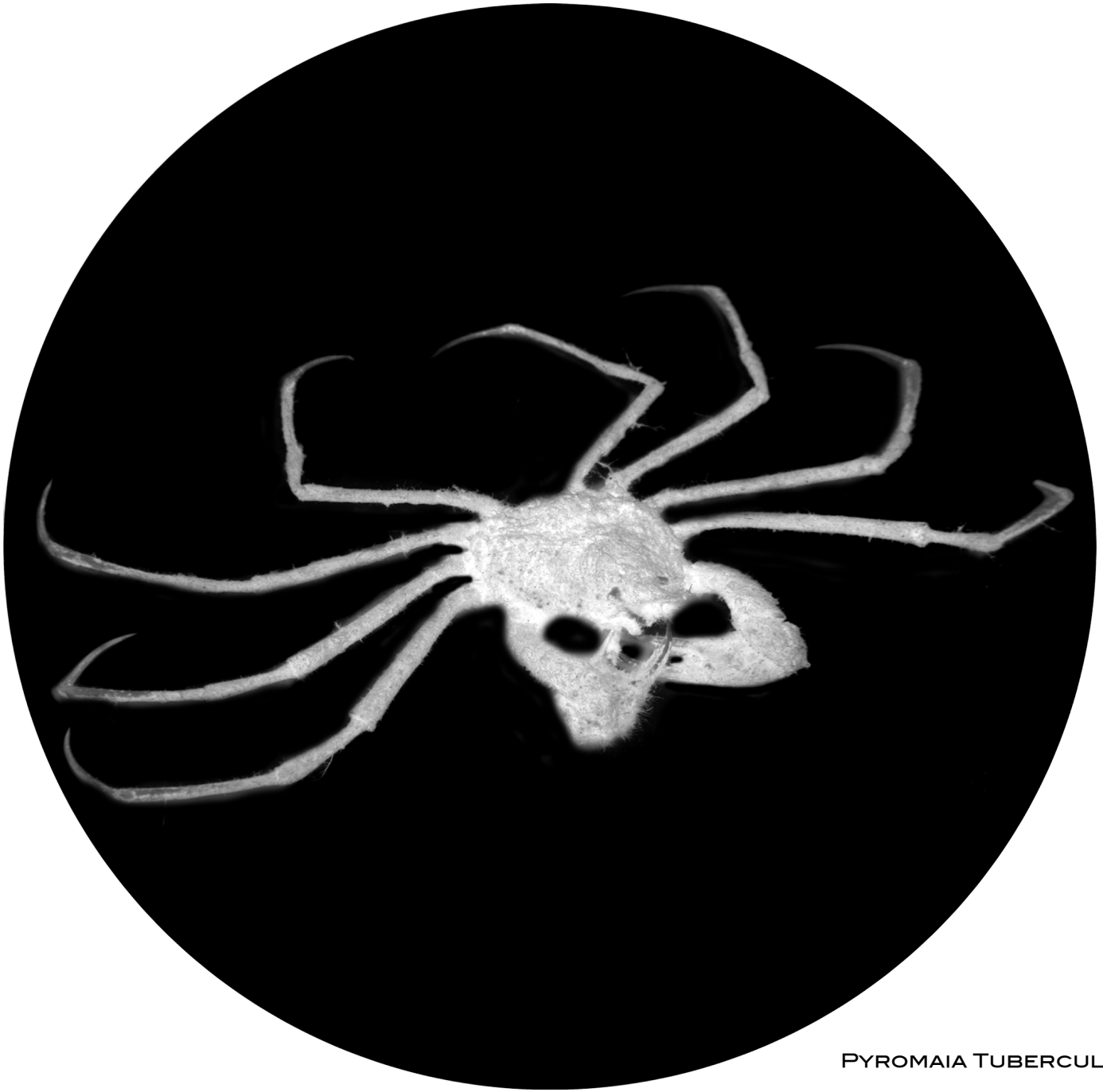

Pyromaia Tuberculata (Native)

Tube Worm

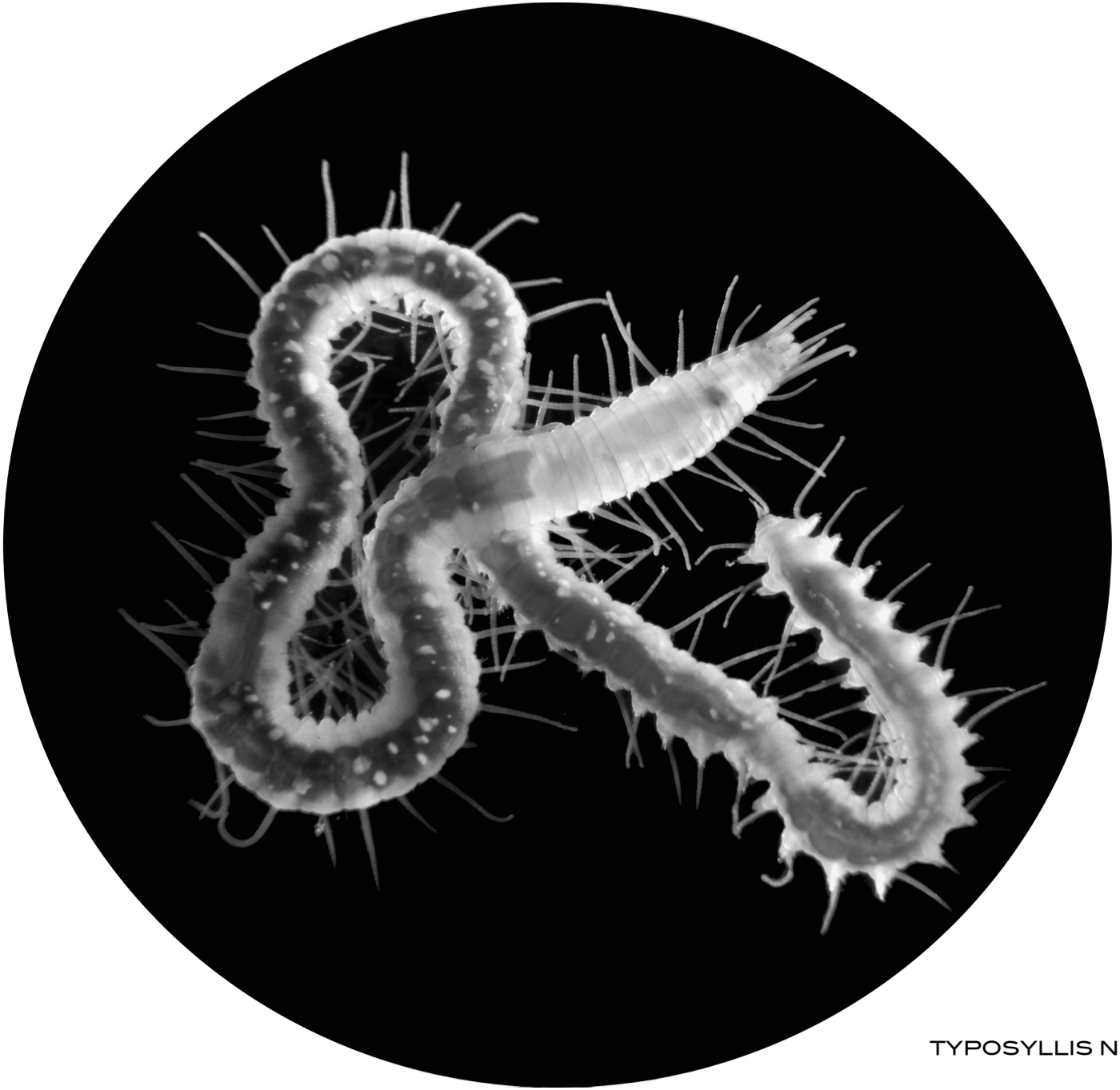

TYPOSYLLIS NIPPONICA

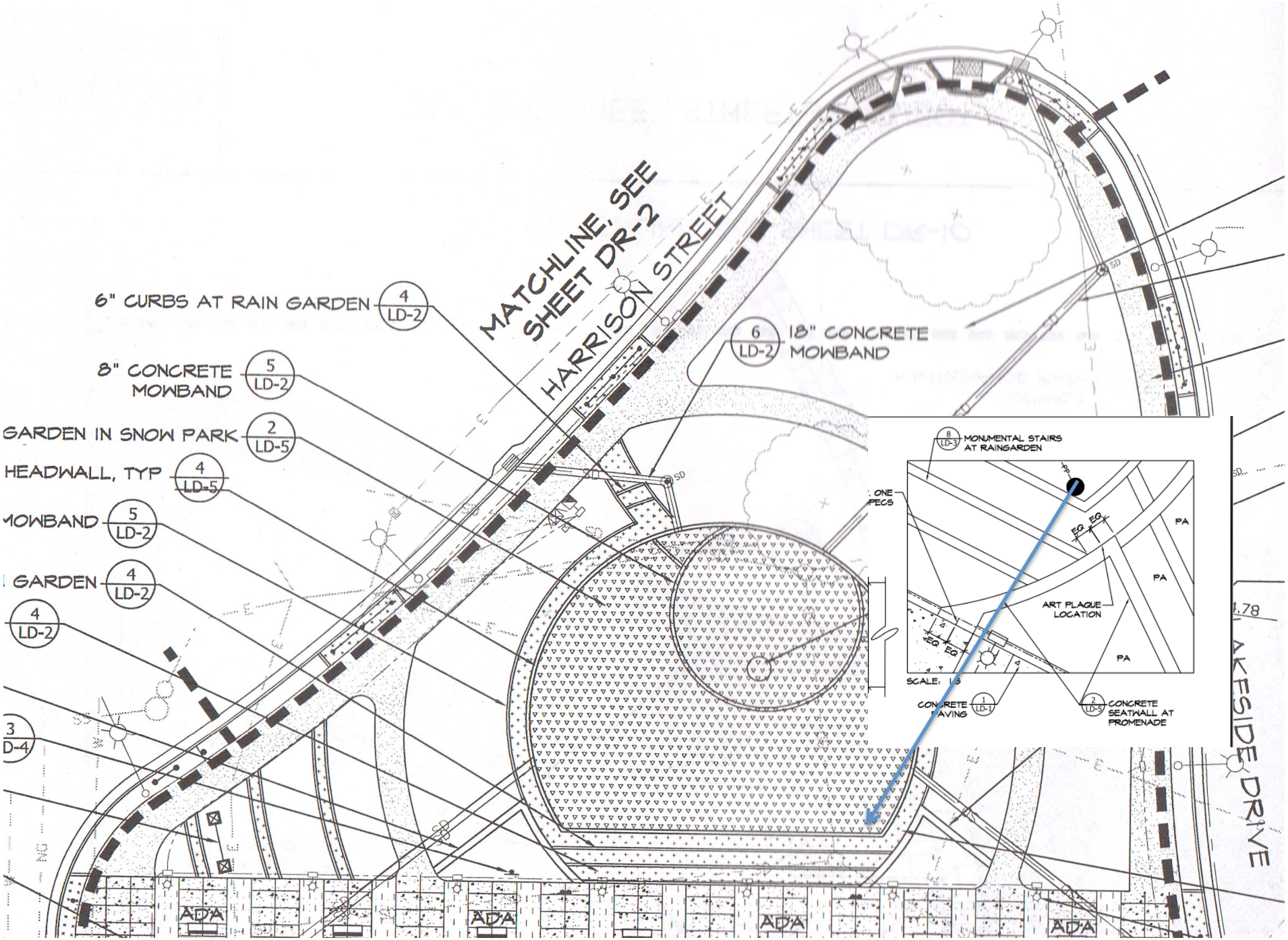
MATCHLINE, SEE SHEET DR-2
HARRISON STREET
6" CURBS AT RAIN GARDEN 4 LD-2
8" CONCRETE MOWBAND 5 LD-2
GARDEN IN SNOW PARK 2 LD-5
HEADWALL, TYP 4 LD-5
MOWBAND 5 LD-2
GARDEN 4 LD-2
4 LD-2
3 D-4
6 LD-2 18" CONCRETE MOWBAND
8 LD-3 MONUMENTAL STAIRS AT RAINGARDEN
ONE PECS
PA
PA
PA
ART PLAQUE LOCATION
EQ
SCALE: 1:5
CONCRETE PAVING 1 LD-1
2 LD-5 CONCRETE SEATWALL AT PROMENADE
ADA
ADA
ADA
ADA
LAKESIDE DRIVE

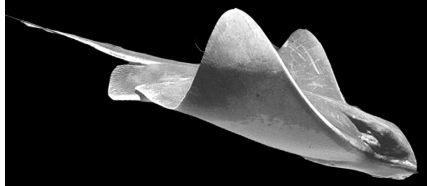

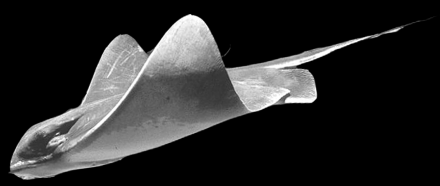

MAKKEWEKS

'Makkeweks': Ohlone/Rumsen for 'sea monster'

Lake Merritt, once a tidal marsh system and estuary with an inlet to the Bay, was home to a variety of wildlife including leopard sharks and bat rays. Sightings of these creatures likely inspired the stories of sea monsters in the Lake. Such stories originated with the Ohlone and persist in our imagination today.

As Lake Merritt's habitat is enhanced and tidal exchange increases, marine wildlife will become more abundant. Makkeweks is an homage to the Lake's renewal and a harkening of the return of resident fauna. Inspired by the bat ray, leopard shark, pipefish and goby, Makkeweks is a sea monster, perhaps as imagined by the Ohlone or by early European settlers, or by future generations upon glimpsing a mysterious fin or hump rising from the estuary.

Other Wowhaus Bronze Sculpture Commissions

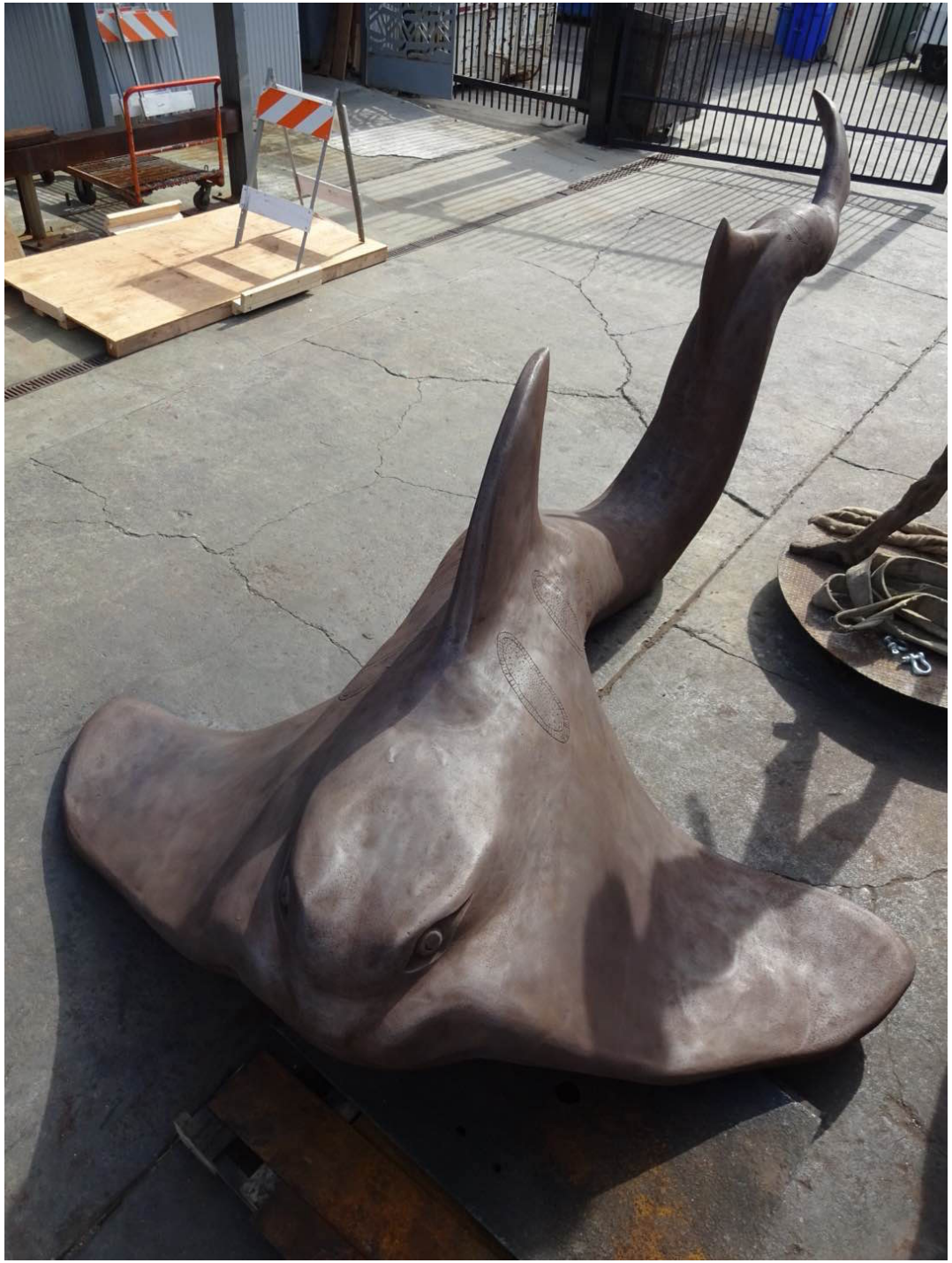

STEEL

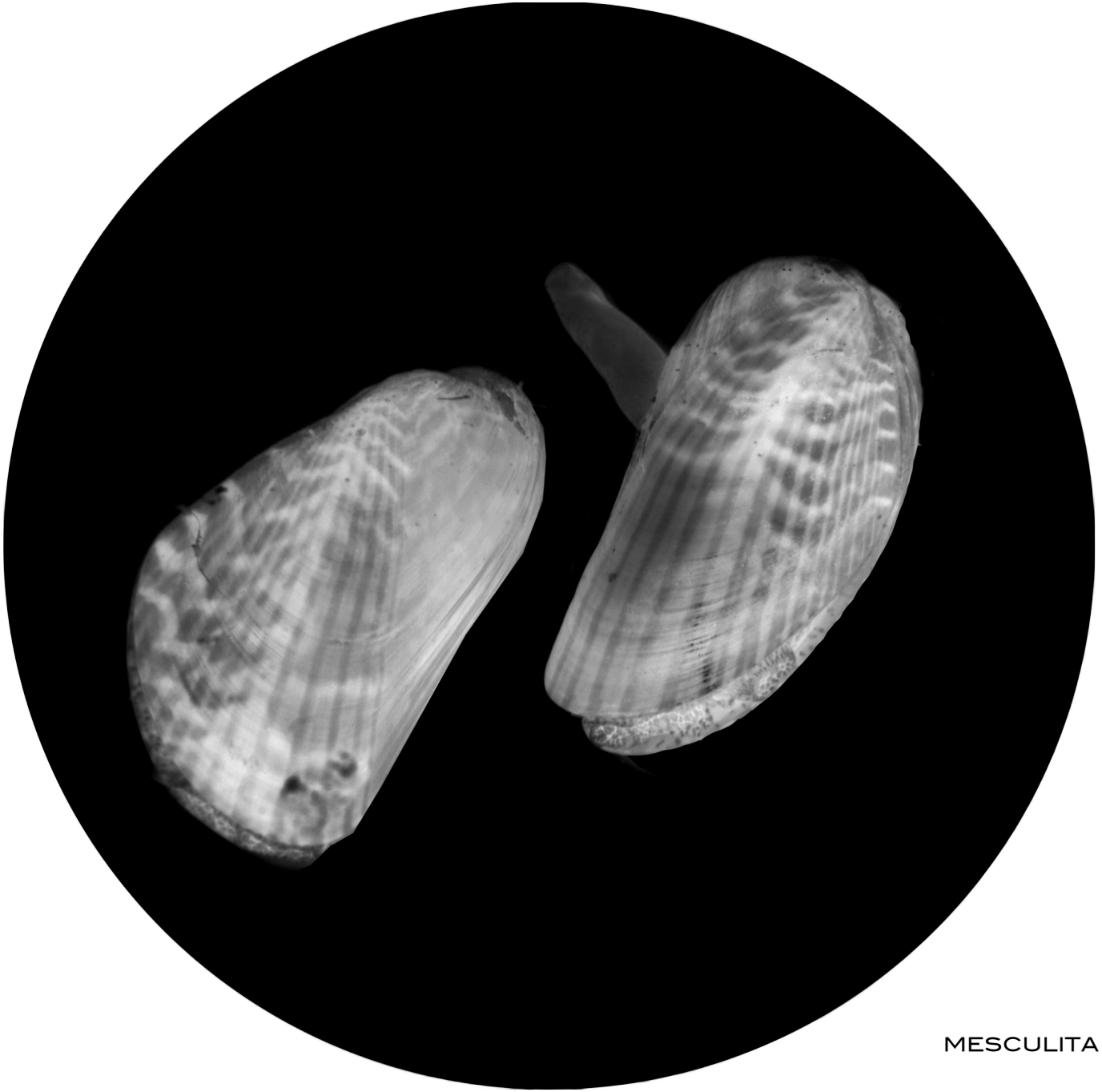

MESCULITA SENHOUSIA

PARANTHURA ELEGANS

Hemigrapsus oregonensis (native)